UNITED STATES POSTAL SERVICE

NORTHERN VIRGINIA VEHICLE MAINTENANCE FACILITY (VMF)
NGDV/ EV CHARGING DEPLOYMENT

2935 PROSPERITY AVENUE, FAIRFAX, VA 22031

USPS PROJECT NUMBER:	K33601
AECOM PROJECT NUMBER:	60711358
DATE: 09/02/2026	BID SET SUBMISSION
DATE: 11/13/2026	ADDENDUM 1



VICINITY MAP
NOT TO SCALE

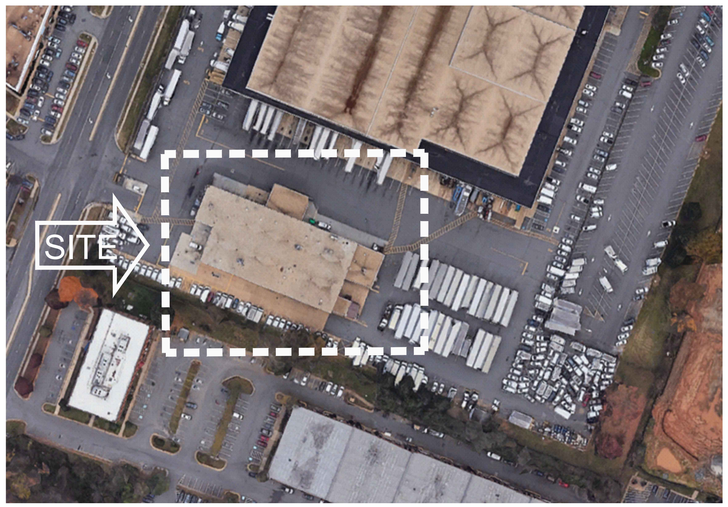

LOCATION MAP
NOT TO SCALE

© Copyright 1997–2008, United States Postal Service

AECOM
1255 Broad Street
Clifton, NJ 07013-3591
(973) 883-8500 tel (973) 883-8501 fax
www.aecom.com

USPS - NORTHERN VIRGINIA VMF
2935 PROSPERITY AVE
FAIRFAX, VIRGINIA, 22031

UNITED STATES POSTAL SERVICE

G0.00 COVER SHEET

Scale: NONE
Project:
USPS File Number: K33601

Date: 09/02/2026

Revisions:

Document Release:

DESIGN CRITERIA

IBC –2021 VIRGINIA INTERNATIONAL BUILDING CODE
NFPA 70 –2020 NATIONAL ELECTRICAL CODE
NFPA 70E –2021 STANDARD FOR ELECTRICAL SAFETY IN THE WORKPLACE
NFPA 101 –LIFE SAFETY CODE
USPS SDC –2023 USPS BUILDING DESIGN STANDARDS
USPS ELECTRIC VEHICLE SITE DESIGN MANUAL 2024–4

GENERAL NOTES

THE FOLLOWING NOTES SHALL APPLY THROUGHOUT CONTRACT DOCUMENTS, UNLESS OTHERWISE NOTED.

1. COMPLY WITH APPLICABLE OSHA REQUIREMENTS, SAFETY CODES AND STANDARDS, BUILDING CODE IN THE JURISDICTION OF THE PROJECTS.
2. THESE DRAWINGS REPRESENT FIELD OBSERVATION, NO HISTORIC AS–BUILT AVAILABLE DURING AECOM SURVEY, AND MAY NOT DEPICT EXACT EXISTING CONDITIONS AND/ OR LOCATIONS, PROFILES, ETC. GENERAL CONTRACTOR IS RESPONSIBLE FOR FIELD VERIFYING ALL EXISTING CONDITIONS AND ABOVE CEILING CONDITIONS PRIOR TO BIDDING THE WORK. IN SUBMITTING A BID ON THIS PROJECT, CONTRACTOR UNDERSTANDS THAT ADDITIONAL PAYMENTS WILL NOT BE MADE FOR DEMOLITION OR RELOCATION OF EXISTING ELEMENTS IN ORDER TO ACCOMPLISH THE WORK. CONTRACTOR SHALL FIELD VERIFY ALL DIMENSIONS AND NOTIFY THE ARCHITECT AND OWNER'S REPRESENTATIVE IMMEDIATELY OF ANY DISCREPANCIES. PRIOR TO SUBMISSION OF BID, CONTRACTORS SHALL VISIT THE PROJECT SITE AND CAREFULLY EXAMINE EXISTING CONDITIONS ON THE PREMISES AND COMPARE THEM WITH EXISTING CONDITIONS INDICATED ON PLANS. SUBMITTAL OF BID SHALL INDICATE THAT CONTRACTORS HAVE EXAMINED THE SITE, EXISTING CONDITIONS AND PREMISES AND HAS INCLUDED ALL REQUIRED ALLOWANCES IN THE BID. NO ALLOWANCE SHALL BE MADE FOR ANY ERROR RESULTING FROM CONTRACTORS FAILURE TO VISIT THE JOB SITE.
3. CONTRACTOR SHALL VERIFY/CONFIRM ALL RELEVANT DIMENSIONS, ELEVATIONS, GRADES AND CONDITIONS OF THE SITE AND/OR BUILDING PRIOR TO THE COMMENCEMENT OF CONSTRUCTION AND/OR ORDERING OF EQUIPMENT OR MATERIALS.
4. DRAWINGS ARE PRINTED ON 30" BY 42" SIZE. DOCUMENTATION IS PROVIDED FROM MULTIPLE SOURCES – FIELD VISITS, OWNER PROVIDED INFORMATION, ETC.
5. COORDINATION OF ALL WORK UNDER THIS CONTRACT SHALL BE MAINTAINED/SCHEDULED TO ENSURE THE QUALITY AND TIMELY COMPLETION OF THE PROJECT DELIVERY.
6. PERFORM ALL CUTTING, PATCHING, DEMOLITION AND REMOVAL REQUIRED TO COMPLETE THE WORK, WHETHER OR NOT SPECIFICALLY INDICATED.
7. WHERE MANUFACTURERS NAMES AND PRODUCT NUMBERS ARE INDICATED ON THE DRAWINGS, IT SHALL ESTABLISH THE LEVEL OF QUALITY FOR THE PROJECT. OTHER PRODUCTS MAY BE SUBMITTED ACCORDING TO THE PROVISIONS OF THE SPECIFICATIONS.
8. MAINTAIN ALL REQUIRED EXITS FROM THE EXISTING OCCUPIED AREAS THROUGHOUT CONSTRUCTION TO PUBLIC PROPERTY. CONTRACTOR SHALL PROVIDE AND MAINTAIN LIFE SAFETY ELEMENTS THROUGHOUT THE DURATION OF THE PROJECT INCLUDING BUT NOT LIMITED TO: EXISTING EGRESS ROUTES UNLESS SUPERSEDED BY TEMPORARY EGRESS ROUTES, EXIT SIGNAGE, DIRECTIONAL SIGNAGE, LIGHTING LEVELS, EMERGENCY LIGHTING AND CLEAR AISLE PATHWAYS, SITE FIRE LANES AND SITE ACCESS TO EXISTING FACILITIES AND EQUIPMENT IN ACCORDANCE WITH LOCAL AND NATIONAL FIRE DEPARTMENT REGULATIONS.
9. CONTRACTOR SHALL COORDINATE THE PROPOSED WORK WITH EXISTING CONDITIONS AND SHALL COORDINATE PATCHING, GRINDING, AND PREPARATION OF ADJACENT SURFACES TO BE ACCEPTABLE BY BOTH THE OWNER AND WITH THE CONSTRUCTION DOCUMENTS.
10. CONTRACTOR SHALL MAINTAIN A SECURE ENVIRONMENT BETWEEN USPS OPERATIONS AND DEMARCATION WORK AREA (DWA) UNLESS OTHERWISE NOTED.
11. CONTRACTOR IS STRONGLY ENCOURAGED TO ATTEND THE PRE–BID WALK– THROUGH AND FAMILIARIZE HIM/ HERSELF WITH EXISTING CONDITIONS. NO ADDITIONAL FEE REQUEST WILL BE PERMITTED FOR CONTRACTOR ENCOUNTERING CONDITIONS THAT WERE READILY OBSERVABLE AT THE WALK–THROUGH REGARDLESS OF CONTRACTORS ATTENDANCE THERETO. ALSO, CONTRACTOR SHOULD BE AWARE THAT ROOMS WITHIN THE SCOPE OF WORK TYPICALLY CONTAIN PHYSICAL OBSTRUCTIONS THAT MAY REQUIRE PROTECTION AND/OR RELOCATION. CONTRACTOR SHALL COORDINATE RELOCATION WITH POST MASTER. ALL USPS WORK AREAS MUST BE RESTORED TO 'NORMAL OPERATION' CONDITION, TO THE SATISFACTION OF USPS, BEFORE POSTAL WORK BEGINS FOR THE DAY.
12. IT IS NOT EXPECTED THAT ASBESTOS WILL BE ENCOUNTERED IN THE COURSE OF THIS CONTRACT. IF ANY MATERIALS SUSPECTED OF CONTAINING ASBESTOS ARE ENCOUNTERED, DO NOT DISTURB THE MATERIALS. IMMEDIATELY NOTIFY THE CONSTRUCTION MANAGER AND THE OWNER.

STANDARD LIST OF ABBREVIATIONS

A

ACT	ACOUSTICAL CEILING TILE
AFF	ABOVE FINISH FLOOR
ALUM	ALUMINUM
APPROX	APPROXIMATE(LY)
ARCH	ARCHITECTURAL/ARCHITECT

B

BLDG	BUILDING
BLK	BLOCK
BLKG	BLOCKING
BM	BEAM
BO	BOTTOM OF

C

CL or ℄	CENTERLINE
CLG	CEILING
CLO	CLOSET
COL	COLUMN
CONST	CONSTRUCTION
CONT	CONTINUOUS (CONTINUED)
CONTR	CONTRACTOR

D

DIM	DIMENSION
DN	DOWN
DWG(S)	DRAWING(S)

E

EA	EACH
EF	EACH FACE
EJ	EXPANSION JOINT
EL	ELEVATION
ELEC	ELECTRIC (AL)
ENGR	ENGINEER
EP	ELECTRICAL PANEL
EQ	EQUAL
EQUIP	EQUIPMENT
EW	EACH WAY
EXH	EXHAUST
EXIST	EXISTING

F

FAB	FABRIC
FBGL	FIBERGLASS
FD	FLOOR DRAIN
FIN	FINISH
FIN FLR	FINISH FLOOR
FLR	FLOOR
FT	FEET (FOOT)
FTG	FOOTINGS

G

GA	GAGE
GALV	GALVANIZED
GC	GENERAL CONTRACTOR

H

H	HIGH
HORIZ	HORIZONTAL
HP	HIGH POINT
HT	HEIGHT
HVAC	HEATING, VENTILATING AND AIR CONDITIONING

I

ID	INSIDE DIAMETER
IN	INCH
INFO	INFORMATION
INSUL	INSULATION
INT	INTERIOR

J

JST	JOIST
JT	JOINT

L

LAV	LAVATORY
LF	LINEAR FEET
LLH	LONG LEG HORIZONTAL
LLV	LONG LEG VERTICAL
LOC	LOCATION
LP	LOW POINT

M

MAS	MASONRY
MAT	MATERIAL
MAX	MAXIMUM
MECH	MECHANICAL
MFG	MANUFACTURING
MFR	MANUFACTURE (ER) (ED)
MIN	MINIMUM
MISC	MISCELLANEOUS

N

NIC	NOT IN CONTRACT
NO or #	NUMBER
NOM	NOMINAL
NTS	NOT TO SCALE

O

OA	OVERALL
OC	ON CENTER
OD	OUTSIDE DIAMETER
OH	OPPOSITE HAND
OPNG	OPENING
OPP	OPPOSITE

P

PARTN	PARTITION
PL	PLATE
PNL	PANEL
PSF	POUNDS/SQUARE FOOT
PSI	POUNDS/SQUARE INCH
PT	PAINT (ED)

R

REF	REFERENCE
REINF	REINFORCE (ED) (ING)
REV	REVISION or REVISED
RM	ROOM
RO	ROUGH OPENING

S

SCHED	SCHEDULE
SF / SQ FT	SQUARE FEET
SHT	SHEET
SIM	SIMILAR TO
SPEC(S)	SPECIFICATION(S)
SQ	SQUARE
STD	STANDARD
STL	STEEL
STRUCT	STRUCTURE or STRUCTURAL

T

THK	THICK
TO	TOP OF
TOC	TOP OF CONCRETE/CURB
TOM	TOP OF MASONRY
TOS	TOP OF STEEL

U

UL	UNDERWRITERS LABORATORY
UNO	UNLESS NOTED OTHERWISE

V

VERT	VERTICAL

W

w/(o)	WITH/(OUT)
W	WIDTH or WIDE
WD	WOOD
WT	WEIGHT

ARCHITECTURAL GRAPHIC SYMBOLS

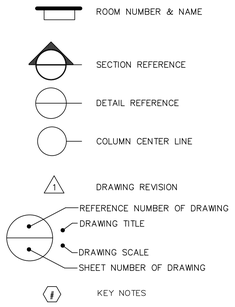

DRAWINGS LIST

		05/31/2024 – 30% SUBMISSION	07/01/2024 – BID SUBMISSION	10/10/2025 – BID SUBMISSION	09/02/2026 – BID SUBMISSION	11/13/2026 – ADDENDUM 1	
GENERAL SHEETS							
G0.00	COVER SHEET	●	●	●	●	●	
G0.01	DRAWINGS LIST, GENERAL NOTES AND ABBREVIATIONS	●	●	●	●	●	
G0.02	LIFE SAFETY PLAN	●	●	●	●	●	
CIVIL SHEETS							
C1.00	SITE PLAN	●	●	●	●	●	
C2.00	SITE DETAILS	●	●	●	●	●	
ARCHITECTURAL SHEETS							
A1.00	VMF DEMOLITION FLOOR PLAN	●	●	●	●	●	
A2.00	VMF FLOOR PLAN – NEW WORK & LIFT SCHEDULE	●	●	●	●	●	
ELECTRICAL SHEETS							
E0.01	ELECTRICAL GENERAL NOTES	●	●	●	●	●	
E1.00	VMF ELECTRICAL DEMOLITION FLOOR PLAN	●	●	●	●	●	
E2.00	VMF ELECTRICAL FLOOR PLAN	●	●	●	●	●	
E2.01	VMF ELECTRICAL SITE PLAN	●	●	●	●	●	
E3.00	ELECTRICAL ONE LINE DIAGRAM & DETAILS	●	●	●	●	●	

© Copyright 1997–2008, United States Postal Service

AECOM
1255 Broad Street
Clifton, NJ 07013-8591
(973) 883-8500 tel
(973) 883-8501 fax
www.aecom.com

USPS - NORTHERN VIRGINIA VMF
2935 PROSPERITY AVE
FAIRFAX, VIRGINIA, 22031

UNITED STATES POSTAL SERVICE

G0.01 DRAWINGS LIST AND GENERAL NOTES AND ABBREVIATIONS

Scale: NONE Date: 09/02/2026 Revisions:
Project:
USPS File Number: K33601 Document Release:

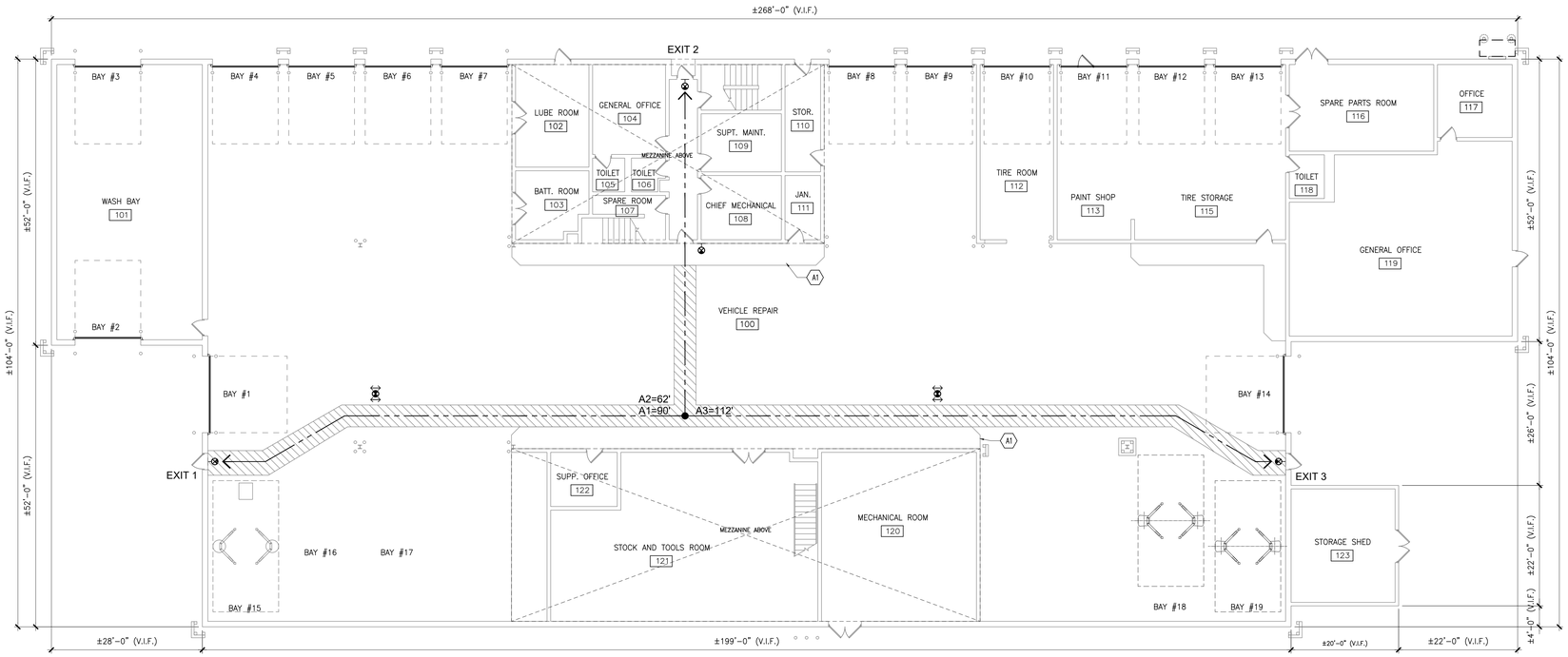

1 G0.02 VMF LIFE SAFETY PLAN
SCALE: 3/32" = 1'-0"
0 8' 16' 24

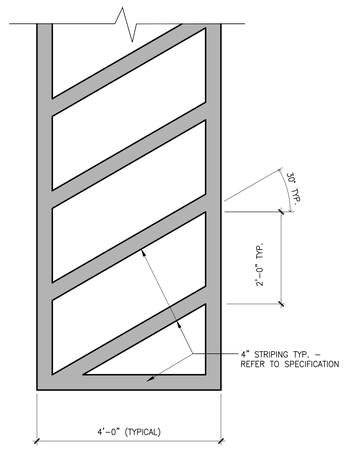

2 G0.02 EGRESS STRIPING DETAIL
SCALE: 3/4" = 1'-0"
0 1' 2' 3'

EGRESS ANALYSIS (EXISTING BUILDING IS SPRINKLERED)

1. MAXIMUM COMMON PATH OF EGRESS TRAVEL DISTANCE (F1)
   75 FT. UNSPRINKLERED
   100 FT. SPRINKLERED
2. MAXIMUM EXIT ACCESS TRAVEL DISTANCE (F1)
   200 FT. UNSPRINKLERED
   250 FT. SPRINKLERED
3. OCCUPANT LOAD OF SPACE: 1 PER 100 S.F. MAXIMUM OCCUPANT LOAD OF SPACE 49.
   VEHICLE REPAIR #1 – 13,842 S.F = 139 OCCUPANTS (3 EXITS).

LIFE SAFETY LEGEND:

'X' — TRAVEL DISTANCE

4'-0"W STRIPING, KEEP CIRCULATION ZONE CLEAR OF EQUIPMENT AND STORAGE. REFER TO DETAIL 2/G0.02 AND SPECIFICATIONS. UNLESS OTHERWISE NOTED

OR — EXIT LIGHT – CONTRACTOR TO FIELD VERIFY IF THE EXISTING NEED TO BE REPLACE OR ADD, INCLUDING POWER. SEE ELECTRICAL DRAWINGS.

CONSTRUCTION KEY NOTES:

Ax 'x' DENOTES KEY NOTE NUMBER BELOW

1. CURB EDGE OF THE RAISED WALKWAY TO BE PAINTED YELLOW.

© Copyright 1997–2008, United States Postal Service

AECOM
1255 Broad Street
Clifton, NJ 07013-8591
(973) 883-8500 tel
(973) 883-8501 fax
www.aecom.com

USPS - NORTHERN VIRGINIA VMF
2935 PROSPERITY AVE
FAIRFAX, VIRGINIA, 22031

UNITED STATES POSTAL SERVICE

G0.02 VMF LIFE SAFETY PLAN

Scale: AS NOTED
Project:
Date: 09/02/2026
USPS File Number: K33601
Revisions:
Document Release:

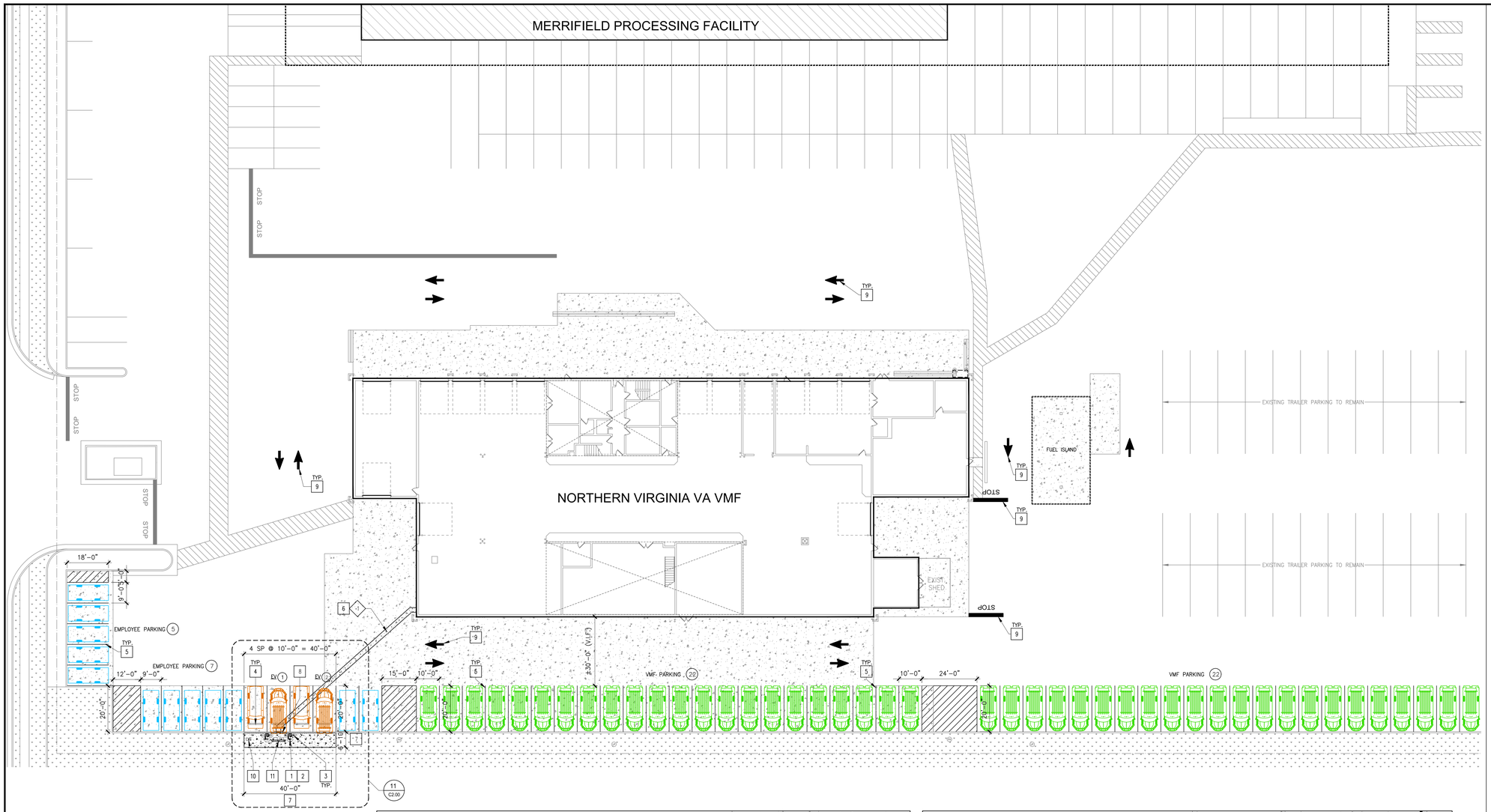

1 C1.00 SITE PLAN
SCALE: 1" = 20'-0"
0 20' 40'

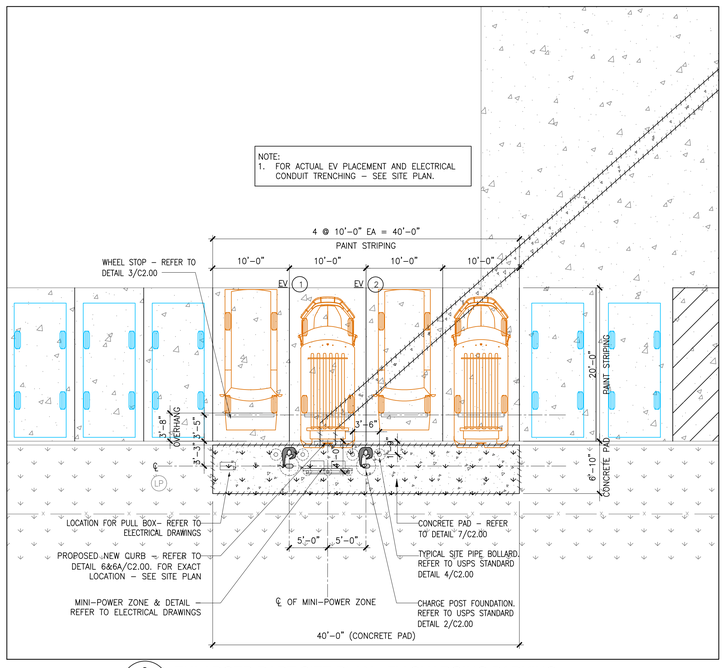

3 C1.00 ENLARGED PART SITE PLAN - EV CHARGING PARKING
SCALE: 1/8" = 1'-0"
0 4' 8' 16'

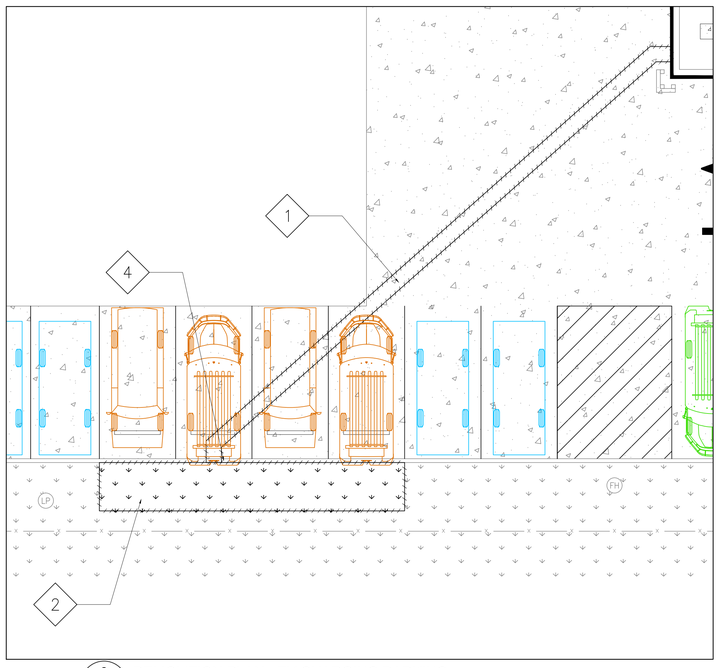

2 C1.00 DEMOLITION PLAN - EV CHARGING PARKING
SCALE: 1/8" = 1'-0"
0 4' 8' 16'

LEGEND:

- EXISTING BUILDING
- DEMO LINE/TRENCHING
- EXISTING CURB
- EXISTING BOLLARD
- EXISTING GRASS AREA
- EXISTING CONCRETE APRON
- PROPOSED CONCRETE RESTORATION – REFER TO SPECIFICATIONS
- NEW PAINT STRIPING – SEE SHEET C2.00
- NEW PARKING PAINT STRIPING – SEE SHEET C2.00
- NEXT GENERATION DELIVERY VEHICLE (NGDV)
- E–TRANSIT CARGO VAN (COTS)
- EMPLOYEE VEHICLE
- LP LAMP POST
- FH FIRE HYDRANT

SITE DEMOLITION KEY NOTES:

CX 'X' DENOTES KEY NOTE NUMBER BELOW

1. SAW CUT PAVEMENT AND EXCAVATE FOR TRENCH OF ELECTRICAL CONDUITS – SEE ELECTRICAL DRAWINGS. CONTRACTOR TO FIELD VERIFY IF THERE ARE ANY CONFLICT WITH UNDERGROUND UTILITY BEFORE COMMENCEMENT THE TRENCHING EXCAVATION WORK.
2. REMOVE GRASS AREA IN PREPARATION FOR NEW CONCRETE PAD.
3. EXISTING BOLLARD TO REMAIN/NOT USED.
4. EXISTING CURB TO BE DEMOLISHED AS NEEDED AT NEW TRENCHING LOCATION.

SITE KEY NOTES:

CX 'X' DENOTES KEY NOTE NUMBER BELOW

1. EV CHARGING STATION – REFER TO SPECS AND ELECTRICAL DRAWINGS. SEE DETAIL 3/C2.00.
2. EV CHARGING FOUNDATION – SEE DETAIL 2/C2.00.
3. NEW BOLLARD – SEE DETAIL 4/C2.00.
4. NEW WHEEL STOP – SEE DETAIL 3/C2.00.
5. NEW PAINT STRIPING – SEE DETAIL 5/C2.00.
6. BACKFILL ELECTRICAL TRENCH AND INSTALL NEW CONCRETE – SEE DETAIL 7/C2.00 AND ELECTRICAL DRAWINGS.
7. PROPOSED CONCRETE PAD – SEE DETAIL 10/C2.00.
8. EXISTING CURB TO BE DEMOLISHED AND INSTALL NEW CURB TO MATCH EXISTING – DETAIL 6&6A/C2.00.
9. NEW PAVEMENT MARKING – SEE DETAIL 9/C2.00.
10. LOCATION FOR PULL BOX – REFER TO ELECTRICAL DRAWINGS.
11. LOCATION FOR MINI POWER ZONE – REFER TO ELECTRICAL DRAWINGS.
12. BACKFILE ELECTRICAL TRENCH AND INSTALL NEW CONCRETE –SEE DETAIL 7/C2.00 AND ELECTRICAL DRAWINGS.

GENERAL NOTES:

1. NO TITLE SEARCH OR PROPERTY BOUNDARY SURVEY WAS COMPLETED FOR THIS PROJECT. NO BOUNDARY LINES ARE DEPICTED ON THIS DATABASE.
2. A SUBSURFACE UTILITY INVESTIGATION HAS NOT BEEN PERFORMED BY AECOM. STORM AND SEWER CONNECTIONS WERE EXCLUDED FROM THIS SCOPE OF SERVICE AND ARE NOT SHOWN HEREON.
3. FINAL LOCATIONS TO BE FIELD VERIFIED PRIOR TO FINAL INSTALLATION. DEVIATIONS TO BE COORDINATED WITH OWNER AND ENGINEER.
4. CONTRACTOR TO REPAINT ALL EXISTING SITE BOLLARDS.
5. CONTRACTOR TO WET SAW CUT EXISTING PAVEMENT TO REMAIN AT NEXT NEAREST JOINT PRIOR TO REMOVALS OF CURB, GUTTER, PAVEMENT, ETC.
6. CONTRACTOR SHALL REMOVE EXISTING PAVEMENT MARKINGS WITH SMALL HANDHELD GRINDERS OR SCARIFIES OR OTHER METHODS, WITH THE APPROVAL OF THE CONSTRUCTION MANAGER. TAKE CARE DURING MARKING REMOVAL NOT TO SCAR, DISCOLOR, OR OTHERWISE DAMAGE THE PAVEMENT SURFACE. DO NOT OVERPAINT OR USE OTHER METHODS OF COVERING MARKINGS INSTEAD OF REMOVAL.

PARKING SPACES	
PARKING TYPE	PROVIDED
EMPLOYEE PARKING	12
VMF PARKING	44
VMF CHARGING PARKING	4

© Copyright 1997–2008, United States Postal Service

AECOM
1255 Broad Street
Clifton, NJ 07013-3591
(973) 883-8500 tel
(973) 883-8501 fax
www.aecom.com

USPS - NORTHERN VIRGINIA VMF
2935 PROSPERITY AVE
FAIRFAX, VIRGINIA, 22031

UNITED STATES POSTAL SERVICE

C1.00 SITE PLAN

Scale: 1" = 20'-0"
Project:
USPS File Number: K33601

Date: 09/02/2026
Revisions:
Document Release:

NOT USED

1 — Detail: TYPICAL VMF PARKING AREA BACK IN - UPDATE
CAD File: | Scale: 3/16" | Fac. | Ch. | Sect. | Para. | Detail: - | USPS SDL Issued: | Last Revised: 10/10/2023

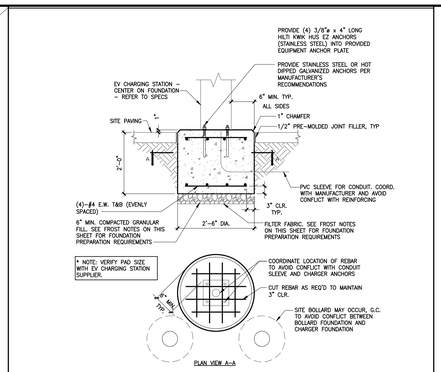

2 — Detail: TYPICAL CHARGING STATION FOUNDATION DETAIL
CAD File: | Scale: 1/2" | Fac. | Ch. | Sect. | Para. | Detail: - - | USPS SDL Issued: | Last Revised: 10/10/2023

NOTE:
1. SEE SITE PLAN FOR QUANTITY OF WHEEL STOPS.
2. SEE USPS PLAN AND PARKING STALL TYPICAL DETAILS TO DETERMINE PLACEMENT OF WHEEL STOP IN PARKING STALL.
3. WHEEL STOP SHALL BE ANCHORED TO CONCRETE/PAVEMENT.
4. DRAINAGE CUTS ALLOWABLE AS NEEDED FOR WATER MANAGEMENT.

3 — Detail: CONCRETE WHEEL STOP
CAD File: | Scale: N.T.S. | Fac. | Ch. | Sect. | Para. | Detail: - | USPS SDL Issued: | Last Revised: 01/03/2026

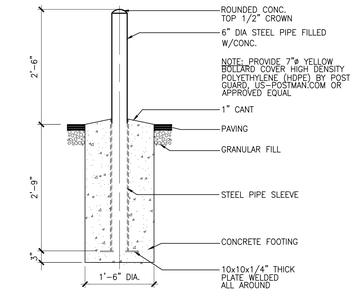

4 — Detail: PROTECTIVE BARRIER DETAIL - TYPICAL SITE PIPE BOLLARD
CAD File: ..\usps\library\details\G1-2-4g.dwg | Scale: 3/4" = 1'-0" | Fac. | Ch. | Sect. | Para. | Detail: G1-2-4 g | USPS SDL Issued: | Last Revised: 10/1/2023

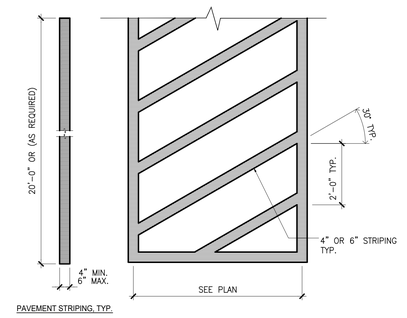

NOTE:
1. USE NON-REFLECTIVE WHITE PAINT, TYP. BUT USE YELLOW PAINT ON CONCRETE OR OTHER SURFACES WHERE WHITE PAINT DOES NOT PROVIDE SUFFICIENT CONTRAST.

5 — Detail: PAVEMENT MARKINGS - TYPICAL PAINTED PARKING SPACE AND AISLE
CAD File: ..\usps\library\details\G1-2-4f.dwg | Scale: 1/2"=1'-0" | Fac. | Ch. | Sect. | Para. | Detail: - - | USPS SDL Issued: | Last Revised:

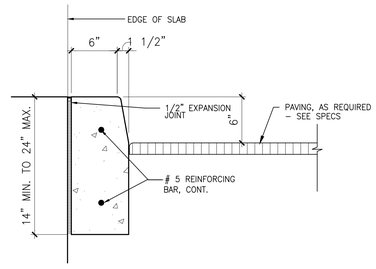

6 — Detail: CURBS - DETAIL @ STRAIGHT CONCRETE CURB
CAD File: ..\Details\G1-2-4e.dwg | Scale: 1-1/2" = 1'-0" | Fac. | Ch. | Sect. | Para. | Detail: G1-2-4 e | USPS SDL Issued: | Last Revised: 4/15/201

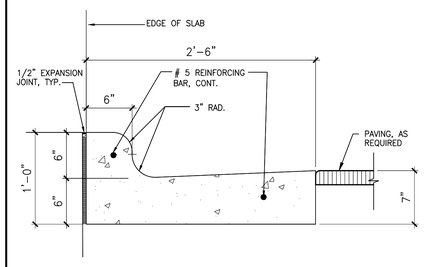

6A — Detail: CURBS - CONCRETE CURB AND GUTTER
CAD File: ..\usps\library\details\G1-2-4b.dwg | Scale: 1-1/2" = 1'-0" | Fac. | Ch. | Sect. | Para. | Detail: G1-2-4 b | USPS SDL Issued: 10/1/2021 | Last Revised: 1/17/2007

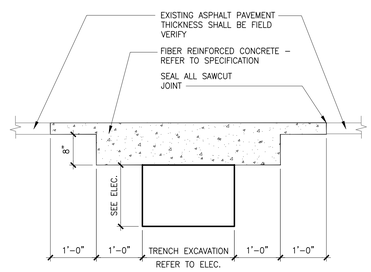

7 — Detail: CONCRETE RESTORATION SECTION
CAD File: | Scale: N.T.S. | Fac. | Ch. | Sect. | Para. | Detail: - - | USPS SDL Issued: | Last Revised:

NOT USED

8 — Detail: PAVEMENT RESTORATION SECTION
CAD File: | Scale: N.T.S. | Fac. | Ch. | Sect. | Para. | Detail: - - | USPS SDL Issued: | Last Revised:

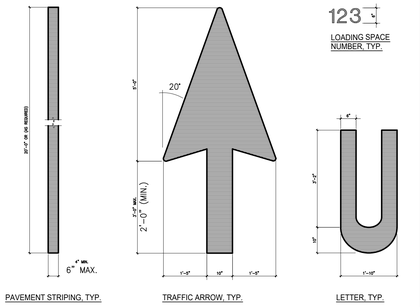

NOTE:
1. USE NON-REFLECTIVE WHITE PAINT, TYP. BUT USE YELLOW PAINT ON CONCRETE OR OTHER SURFACES WHERE WHITE PAINT DOES NOT PROVIDE SUFFICIENT CONTRAST.

9 — Detail: PAVEMENT MARKINGS - TYPICAL PAINTED SIGNAGE
CAD File: ..\usps\library\details\G1-2-4f.dwg | Scale: 1/2"=1'-0" | Fac. | Ch. | Sect. | Para. | Detail: G1-2-4 f | USPS SDL Issued: | Last Revised: 3/17/1993

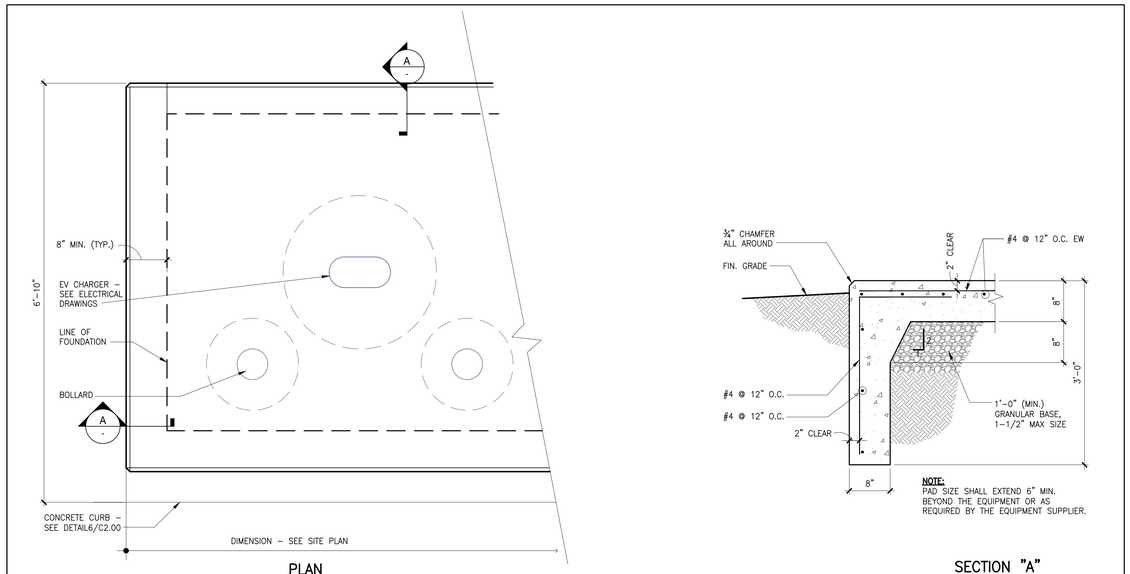

PLAN

NOTE:
PAD SIZE SHALL EXTEND 6" MIN. BEYOND THE EQUIPMENT OR AS REQUIRED BY THE EQUIPMENT SUPPLIER.

SECTION "A"

CONCRETE NOTES

1. REINFORCED CONCRETE OF THE FOUNDATION (IE FOUNDATION WALLS, SLABS & SLAB ON GROUND) SHALL BE OF NATURAL AGGREGATES CONFORMING TO ASTM C-33 AND SHALL DEVELOP A MINIMUM COMPRESSIVE STRENGTH OF 5000 PSI @ 28 DAYS UNLESS OTHERWISE NOTED.
2. REINFORCEMENT SHALL BE HIGH TENSILE GRADE DEFORMED BARS CONFORMING TO ASTM A-615 GRADE 60.
3. CALCIUM CHLORIDE, ADMIXTURES CONTAINING THIOCYANATE OR ADMIXTURES CONTAINING MORE THAN 0.05 PERCENT CHLORIDE IONS SHALL NOT BE USED.
4. FOLLOW ACI 318 AND 350 RULES AS TO STIRRUPS, ANCHORAGE, TEMPERATURE REINFORCEMENT AND SPACING OF BARS IN BEAMS UNLESS OTHERWISE NOTED.
5. ALL CONCRETE EXPOSED TO THE WEATHER TO BE AIR ENTRAINED AND SHALL CONFORM TO ASTM C-260. AIR CONTENT AS DETERMINED BY ASTM C231: 5 +/- 1.5 % FOR CONCRETE USING 1-1/2" MAX. AGGREGATE.
6. THE MAXIMUM NOMINAL SIZE COARSE AGGREGATE IS 1-1/2 INCH.
7. THE SLUMP SHALL BE BETWEEN 2 AND 5 INCHES.
8. THE MAXIMUM WATER-CEMENTITIOUS MATERIAL RATIO IS 0.50.
9. PROVIDE SUPPORTS FOR REINFORCEMENT IN ACCORDANCE WITH ACI STANDARDS.
10. REINFORCING BARS SPLICED AT POINTS OF STRESS TO BE LAPPED A MINIMUM OF 40 DIAMETERS.
11. ALL HORIZONTAL WALL REINFORCING SHALL BE CONTINUOUS. LAP TO BE 36 DIAMETERS MINIMUM.
12. POST INSTALLED ADHESIVE OR MECHANICAL ANCHORS SHALL BE MANUFACTURED BY HILTI OR APPROVED EQUAL.
13. ALL EXPOSED CORNERS SHALL BE CHAMFERED 3/4 INCH TYPICAL UNLESS OTHERWISE NOTED.
14. THE MINIMUM CONCRETE COVER SHALL BE AS FOLLOWS UNLESS OTHERWISE NOTED ON DRAWINGS:
    a. 3" – CONCRETE CAST AGAINST AND PERMANENTLY EXPOSED TO EARTH
    b. 2" – CONCRETE EXPOSED TO EARTH OR WEATHER (#6 BARS AND LARGER)
    c. 2" – CONCRETE EXPOSED TO EARTH OR WEATHER (#5 BARS AND SMALLER)
    d. 1" – FOR SLAB AND WALLS NOT EXPOSED TO EARTH OR WEATHER.

10 / C2.00 — CONCRETE PAD DETAIL
SCALE: NTS

© Copyright 1997-2008, United States Postal Service

AECOM
1255 Broad Street
Clifton, NJ 07013-4591
(973) 883-8500 tel (973) 883-8501 fax
www.aecom.com

USPS - NORTHERN VIRGINIA VMF
2935 PROSPERITY AVE
FAIRFAX, VIRGINIA, 22031

UNITED STATES POSTAL SERVICE

C2.00 SITE DETAILS

Scale: AS NOTED
Project:
Date: 09/02/2026
USPS File Number: K33601

Revisions:
Document Release:

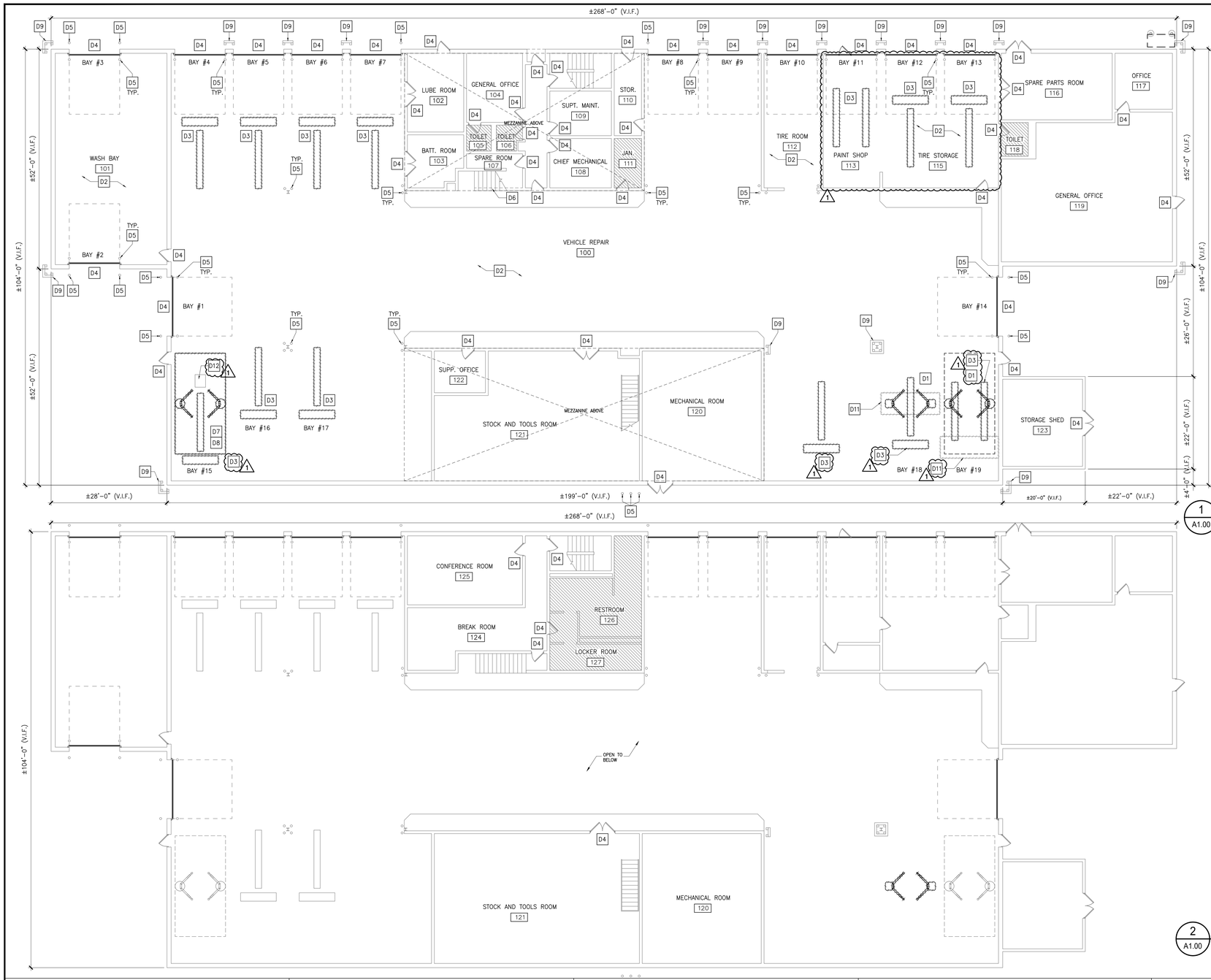

1 A1.00 VMF DEMOLITION GROUND FLOOR PLAN
SCALE: 3/32" = 1'-0"
0 8' 16' 24

2 A1.00 VMF DEMOLITION MEZZANINE FLOOR PLAN
SCALE: 3/32" = 1'-0"
0 8' 16' 24

DEMOLITION KEY NOTES:

Dx 'x' DENOTES KEY NOTE NUMBER BELOW

DEMOLITION LINE

1. ALL VEHICLE LIFTS SHALL BE PROVIDED AND INSTALLED BY OTHERS. PATCH AND REPAIR FLOOR AS REQUIRED FOR THE PREVIOUS LIFT LOCATION.
2. REMOVE AND REPLACE LIGHT FIXTURES – REFER TO ELECTRICAL DRAWINGS.
3. EXISTING IN-GROUND EQUIPMENT TO BE REMOVED WITH ALL ASSOCIATED EQUIPMENT. 1
4. SCRAPE, SAND AND PREPARE HOLLOW EXISTING METAL DOORS, OVERHEAD DOORS AND FRAMES FOR NEW FINISHES.
5. SCRAPE, SAND AND PREPARE EXISTING BOLLARDS FOR NEW FINISHES – TYPICAL IN ALL LOCATION.
6. SCRAPE, SAND AND PREPARE RAILING, GUARDRAIL AND METAL STAIR FOR NEW FINISHES.
7. EXISTING HEAVY-DUTY, 2-POST MOTOR VEHICLE LIFT TO REMAIN. CONTRACTOR TO PROVIDE THE LIFT WITH VERTICAL POST EXTENSIONS TO ALLOW RAISED CROSS BARS TO MEET EV CLEARANCE REQUIREMENTS.
8. EXISTING HEAVY-DUTY, 2-POST MOTOR VEHICLE LIFT SHALL BE REMOVED AND REPOSITIONED TO MEET EV CLEARANCES. PATCH AND REPAIR FLOOR AS REQUIRED.
9. REMOVE ALL HORIZONTAL WOOD PROTECTIONS. SCRAPE, SAND AND PREPARE EXISTING STEEL PROTECTIONS FOR NEW FINISHES.
10. POWER WASH EXISTING FLOOR AND REMOVE DIRT & GREASE.
11. SAW CUT EXISTING SLAB AS NEEDED TO PROVIDE NEW SLAB AT VEHICLE LIFTS- SEE PROPOSED PLAN ON A2.00
12. EXISTING METAL COVER PREPARE SURFACE FOR NEW PAINT (TYP.) 1

LEGEND:

AREAS AND EQUIPMENT NOT IN SCOPE, EXCEPT AS KEY NOTES INDICATED.

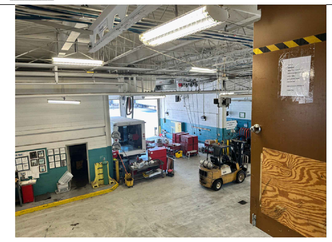

PHOTO 8: EXISTING CONDITIONS – INTERIOR – VIEW FROM MEZZANINE TOWARDS THE MAIN REPAIR AREA.



PHOTO 7: EXISTING CONDITIONS – INTERIOR – EXISTING TIRE STORAGE.

PHOTOGRAPHS:



PHOTO 1: EXISTING CONDITIONS – EXTERIOR – FACADE AND BOLLARDS.



PHOTO 2: EXISTING CONDITIONS – EXTERIOR – FACADE AND BOLLARDS.



PHOTO 3: EXISTING CONDITIONS – EXTERIOR – EXISTING PARKING

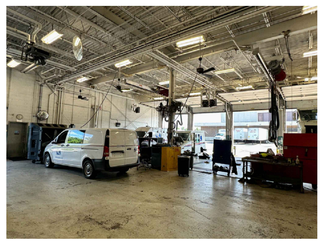

PHOTO 4: EXISTING CONDITIONS – INTERIOR– MAIN VEHICLE REPAIR AREA.



PHOTO 5: EXISTING CONDITIONS – INTERIOR– MAIN VEHICLE REPAIR AREA.

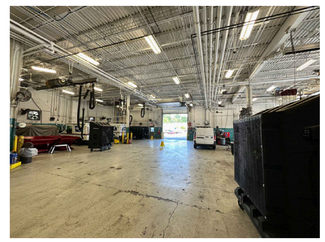

PHOTO 6: EXISTING CONDITIONS – INTERIOR– MAIN VEHICLE REPAIR AREA.

© Copyright 1997-2008, United States Postal Service

AECOM
1255 Broad Street
Clifton, NJ 07013-3591
(973) 883-8500 tel (973) 883-8501 fax
www.aecom.com

USPS - NORTHERN VIRGINIA VMF
2935 PROSPERITY AVE
FAIRFAX, VIRGINIA, 22031

UNITED STATES POSTAL SERVICE

A1.00 VMF DEMOLITION FLOOR PLAN

Scale: 3/32"=1'-0" Date: 09/02/2026 Revisions: 2026-11-13 ADDENDUM_1
Project: Document Release:
USPS File Number: K33601

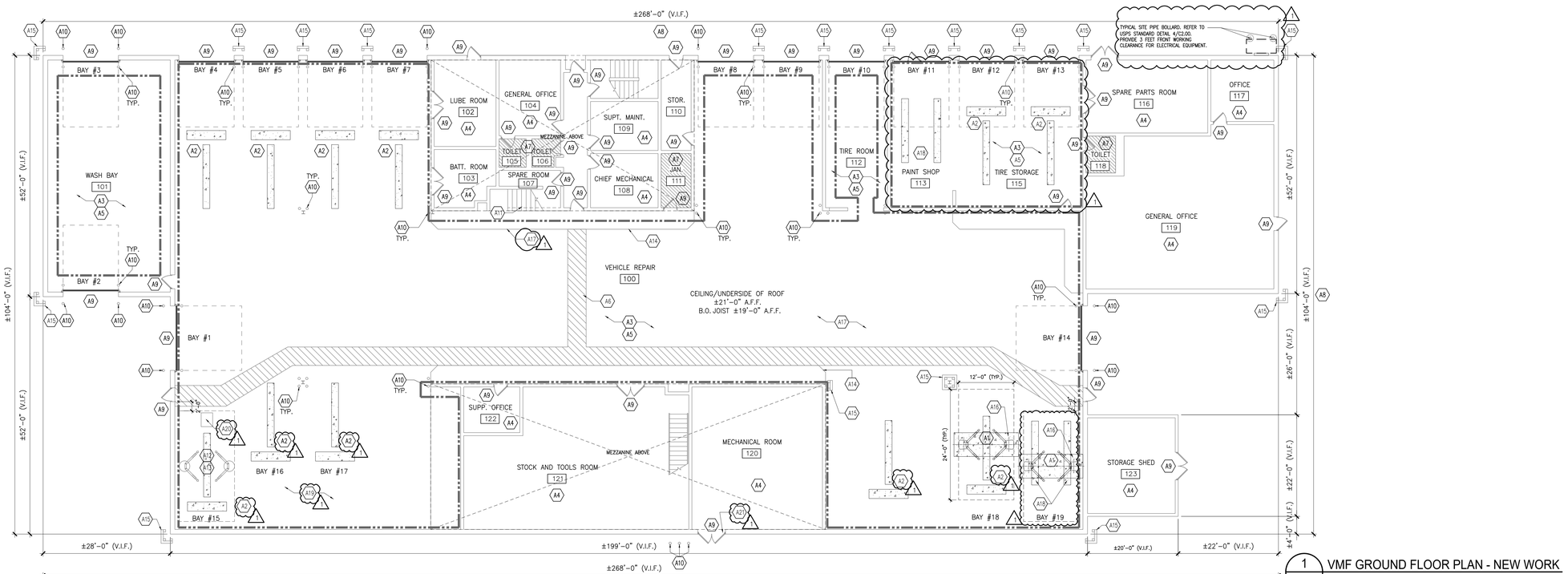

1 A2.00 VMF GROUND FLOOR PLAN - NEW WORK
SCALE: 3/32" = 1'-0" 0 8' 16' 24

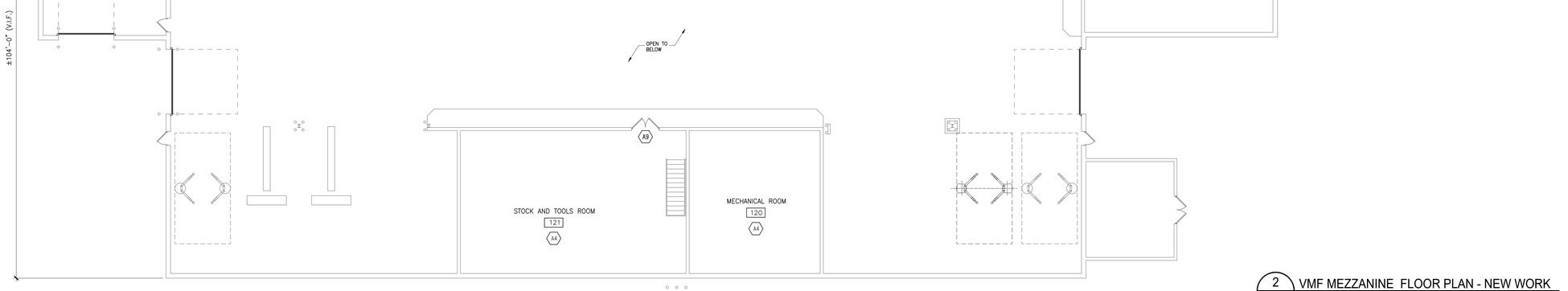

2 A2.00 VMF MEZZANINE FLOOR PLAN - NEW WORK
SCALE: 3/32" = 1'-0" 0 8' 16' 24

LIFT SCHEDULE

SERVICE BAY NUMBER	EXISTING LIFT		NEW LIFT			REMARKS
	LIFT TYPES	CAPACITY LBS.	LIFT NUMBER	LIFT TYPES	CAPACITY LBS.	
1	–	–	–	–	–	4
2	–	–	–	–	–	4
3	–	–	–	–	–	4
4	SURFACE MOUNTED HYDRAULIC LIFT	18,500	4	–	–	3
5	SURFACE MOUNTED HYDRAULIC LIFT	27,750	5	–	–	3
6	SURFACE MOUNTED HYDRAULIC LIFT	27,750	6	–	–	3
7	SURFACE MOUNTED HYDRAULIC LIFT	18,500	7	–	–	3
8	–	–	–	–	–	4
9	–	–	–	–	–	4
10	–	–	–	–	–	4
11	–	–	–	–	–	4
12	–	–	–	–	–	4
13	–	–	–	–	–	4
14	–	–	–	–	–	4
15	SURFACE MOUNTED 2 POST LIFT	10,000	15	–	–	5 & 6
16	SURFACE MOUNTED HYDRAULIC LIFT	18,500	16	–	–	3
17	SURFACE MOUNTED HYDRAULIC LIFT	18,500	17	–	–	3
18	SURFACE MOUNTED 2 POST LIFT	7,000	18	2–POST	12,000	1 & 2
19	SURFACE MOUNTED 2 POST LIFT	10,000	19	2–POST	12,000	1 & 2

NOTES:
1. REFER TO SPECIFICATION FOR LIFT MODEL NUMBER INFORMATION.
2. FOR POWER – REFER TO ELECTRICAL DRAWINGS.
3. EXISTING LIFT TO REMAIN.
4. NO LIFT AT BAY.
5. EXISTING LIFT TO REMAIN. CONTRACTOR SHALL PROVIDE THE LIFT WITH VERTICAL POST EXTENSIONS TO ALLOW RAISED CROSS BARS OF CLEARANCE 15'-3" MINIMUM TO MEET EV CLEARANCE REQUIREMENTS.
6. EXISTING LIFT TO BE REMOVED AND REPOSITIONED TO MEET EV CLEARANCES.

LIFTS & LIFT EXTENSIONS TO BE SUPPLIED BY USPS AND INSTALLED BY CONTRACTOR. (1)

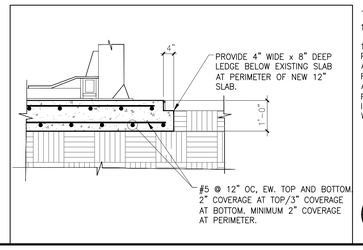

3 A2.00 VMF POST CONCRETE PAD DETAIL
SCALE: NTS

EXISTING VEHICLE REPAIR SLAB

1. CONTRACTOR SHALL VERIFY EXISTING SLAB MINIMUM COMPRESSIVE STRENGTH 4000 PSI AND SLAB THICKNESS IN THE EXISTING VEHICLE REPAIR AREA. IF NOT COMPLY, REMOVE TWO POST CONCRETE SLAB AREA AND PROVIDE NEW CONCRETE PAD, REFER TO DETAIL BELOW.
2. CONTRACTOR TO PROVIDE ALLOWANCE FOR THE THICKENED CONCRETE SLAB IF THE EXISTING CONCRETE STRENGTH BELOW 4000 PSI.

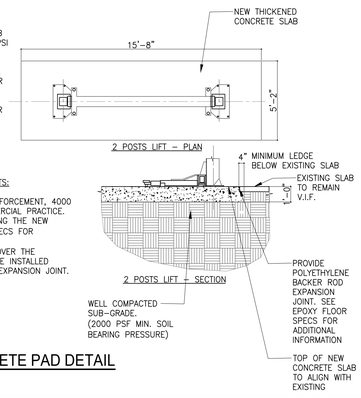

NOTE:

1– STANDARD CONCRETE FLOOR REQUIREMENTS:

12 INCHES MINIMUM DEPTH, WITH STEEL REINFORCEMENT, 4000 PSI, CURED FOR 28 DAYS PER LOCAL COMMERCIAL PRACTICE. ALLOW FOR 5 DAYS MINIMUM BEFORE APPLYING THE NEW RESINOUS FLOORING (EPOXY FINISH), SEE SPECS FOR ADDITIONAL INFORMATION.
FLOOR SHOULD BE LEVEL WITHIN 3/8 INCH OVER THE INSTALLATION AREA. NO ANCHORS SHOULD BE INSTALLED WITHIN 8 INCHES OF ANY CRACK, EDGE, OR EXPANSION JOINT.

GENERAL NOTES:

1. CONTRACTOR TO VERIFY ALL CONDITIONS AND DIMENSIONS IN FIELD BEFORE PROCEEDING WITH THE WORK. REPORT ANY INCONSISTENCIES TO THE A/E AND ACM.
2. CONTRACTOR SHALL HAVE APPROVED SHOP DRAWINGS, CATALOG CUTS, AND SAMPLES BEFORE ANY MATERIAL IS BROUGHT ON THE JOB SITE. ALL MATERIALS INSTALLED IN THE WORK SHALL MATCH THE APPROVED SUBMITTALS.
3. ALL INTERIOR WALLS INCLUDING OFFICES, SUPPORT AREAS SHALL RECEIVE NEW PAINT FINISH. OFFICES CEILING HEIGHTS AROUND ±8'–0" (V.I.F.) – REFER TO SPECIFICATION.
4. ALL MOVABLE EQUIPMENT/ FURNITURE SHALL BE TEMPORARILY REMOVED AND RE–INSTALL DURING PAINTING THE WALL AND FLOOR.
5. ALL HOLLOW METAL DOORS AND FRAME SHALL RECEIVED NEW PAINT – SEE SPECS.
6. FOR EV CHARGING STATION POSITION PLEASE REFER TO THE SITE PLAN DRAWING, SHEET C100.
7. PROPER SITE PREPARATIONS FOR FLOOR GRINDING SHOULD INCLUDE THE FOLLOWING:
   – ESTABLISHMENT OF PROPER CONTAINMENT AREAS WHERE WORK IS TO BE CONDUCTED;
   – INSTALLATION OF ADDITIONAL PLASTIC WRAP CURTAINS TO ISOLATE THE WORK AREA AND CONTROL ANY POTENTIAL DUST;
   – ELEVATION OF WRAP AND CONTAINMENT AREAS ARE FROM THE CEILING LEVEL TO THE FLOOR;
   – PROPER VENTILATION HAS BEEN SET UP;
   – REPLACEMENT OF HEPA FILTERS IN GC GRINDING, VACUUM AND VENTILATION EQUIPMENT TO HELP MINIMIZE ANY POTENTIAL DUST;
   – PROVISION OF EAR PLUGS AND DUST MASKS BY THE GC FOR ANY ONSITE PERSONNEL WHO MAY WANT OR NEED THEM WHILE WORK ACTIVITIES ARE BEING PERFORMED.

CONSTRUCTION KEY NOTES:

'x' DENOTES KEY NOTE NUMBER BELOW

1. NEW VEHICLE LIFT TO BE SUPPLIED BY USPS AND INSTALLED BY CONTRACTOR. INSTALLATION OF THE LIFTS SHALL BE COORDINATED PER THE KEY NOTES #2 & #5 & #12.
2. EXISTING HEAVY–DUTY IN–GROUND VEHICLE LIFT TO BE REMOVED WITH ALL ASSOCIATED EQUIPMENT, INFILL PIT WITH CONCRETE TO MATCH EXISTING FLOOR LEVEL. (1)
3. PAINT EXISTING PERIMETER WALLS WITH P–1 & P–2. SEE ELEVATION THIS SHEET AND SPECIFICATIONS. FIELD VERIFY EXISTING COLUMN SHALL RECEIVED NEW PAINT, ONE COAT OF PRIMER & 2 COATS OF FINISHED PAINT. SEE DETAIL 3/A2.00.
4. PAINT ALL INTERIOR WALLS – REFER TO SPECIFICATIONS.
5. PREP FLOOR WITH SCARIFIED OR SHOT BLASTED AND POWER WASH EXISTING FLOOR AND REMOVE DIRT & GREASE. PREP FLOOR TO RECEIVE EPOXY FLOOR. SEE FINISH SCHEDULE AND SPECIFICATIONS. SEE GENERAL NOTE #8 ON THIS SHEET. EPOXY FINISH SHALL BE RESINOUS FLOORING BY STONHARD, NO SUBSTITUTION.
6. NEW STRIPING CIRCULATION ZONE – REFER TO LIFE SAFETY PLAN IN G0.02.
7. EXISTING RESTROOM NOT IN SCOPE.
8. POWER WASH EXTERIOR WALL\ BUILDING, ALL SIDES. FOR EXTENT – SEE PHOTOS IN A1.00.
9. PROVIDE ONE COAT OF PRIMER & TWO COATS OF FINISHED PAINT ON ALL HOLLOW METAL DOORS & FRAMES AND OVERHEAD DOORS.
10. PROVIDE ONE COAT OF PRIMER & TWO COATS OF FINISH PAINT ON ALL BOLLARDS AND STEEL ANGLE PROTECTIONS. FOR LOCATION REFER TO PHOTOS ON A1.00. V.I.F. IF THE BOLLARD HAS THE PLASTIC SLEEVE COVER – POWER WASH WITH DETERGENT AND REMOVE MILDEW IN LIEU OF PAINTING.
11. PROVIDE ONE COAT OF PRIMER & TWO COATS OF FINISH PAINT ON RAILING, GUARDRAIL AND METAL STAIR.
12. EXISTING HEAVY–DUTY, 2–POST MOTOR VEHICLE LIFT TO REMAIN. CONTRACTOR TO PROVIDE THE LIFT WITH VERTICAL POST EXTENSIONS TO ALLOW RAISED CROSS BARS TO MEET EV CLEARANCE REQUIREMENTS.
13. RELOCATED HEAVY–DUTY, 2–POST MOTOR VEHICLE LIFT TO MEET EV CLEARANCES.
14. CURB EDGE OF THE RAISED WALKWAY TO BE PAINTED YELLOW.
15. PROVIDE ONE COAT OF PRIMER & TWO COATS OF FINISH PAINT ON ALL STEEL PROTECTIONS.
16. NEW THICKENED CONCRETE SLAB AT 2–POST VEHICLE LIFTS, PROVIDE POLYETHYLENE BACKER ROD EXPANSION JOINT. SEE DETAIL 4/A2.00. CONTRACTOR TO COORDINATE WITH USPS FOR INSTALLATION OF THE NEW LIFT.
17. PATCH AND REPAIR EXISTING DAMAGED/ UNEVEN FLOOR PRIOR TO EPOXY WORK. FIELD VERIFY DAMAGED AREA LOCATION AND QUANTITY.
18. EXISTING DYNAMOMETER TO BE REMOVED WITH ALL ASSOCIATED EQUIPMENT, INFILL FLOOR SLAB AS NEEDED TO ALIGN WITH EXISTING FLOOR LEVEL.
19. EXISTING EXHAUST SYSTEM TO BE REMOVED AND REPLACED WITH NEW.
20. EXISTING FLOOR COVER TO BE PAINTED, PREPARE SURFACE AS NEEDED.
21. FIX & REPAIR EXISTING DOOR THRESHOLD. (1)

LEGEND:

EXTENT OF EPOXY FLOOR FINISH

AREAS AND EQUIPMENT NOT IN SCOPE, EXCEPT AS KEY NOTES INDICATED.

USPS STANDARD PAINT COLOR

PAINT (SEE NOTE 1)

P–1	WHITE
P–2	LIGHT GRAY
P–3	NOT USED
P–4	NOT USED
P–5	NOT USED
P–6	DARK GRAY – DOOR AND FRAMES
HANDRAILS/ GUARDRAILS/STRINGERS	SHERWIN WILLIAMS, SW 6966, BLUEBLOOD
DOCK PIT ANGLES, PIPE BOLLARD w/ HORIZ. CHANNELS, CONC. COL. BASES, ETC.	SAFETY YELLOW
COLUMNS w/ FIRE EXTINGUISHERS	SAFETY RED

KEYED NOTES:

1. FINISHES LISTED THE PREFERRED OPTION. ACCEPTABLE ALTERNATES ARE LISTED IN THE APPROPRIATE SPECIFICATION SECTIONS.
2. FOR REPAIR SHOPS/WASH BAYS – AS PER PAINT FINISH ELEVATION 2/A2.00

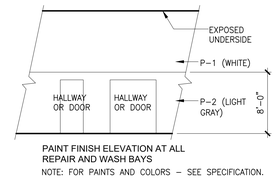

PAINT FINISH ELEVATION AT ALL REPAIR AND WASH BAYS
NOTE: FOR PAINTS AND COLORS – SEE SPECIFICATION.

4 A2.00 PAINT FINISH ELEVATION
SCALE: NTS

© Copyright 1997–2008, United States Postal Service

AECOM
1255 Broad Street
Clifton, NJ 07013-3591
(973) 883-8500 tel (973) 883-8501 fax
www.aecom.com

USPS - NORTHERN VIRGINIA VMF
2935 PROSPERITY AVE
FAIRFAX, VIRGINIA, 22031

UNITED STATES POSTAL SERVICE

VMF FLOOR PLAN & LIFT SCHEDULE

Revisions: 2026-11-13 ADDENDUM_1
Date: 09/02/2026
Document Release:

A2.00

Scale: 3/32"=1'-0"
Project: USPS File Number: KJ3601

GENERAL NOTES

1. ALL WORK, EQUIPMENT AND MATERIALS FURNISHED SHALL CONFIRM TO REQUIREMENTS AND SPECIFICATIONS OF THE NATIONAL ELECTRICAL CODE, THE NATIONAL ELECTRICAL MANUFACTURERS ASSOCIATION, THE INSTITUTE OF ELECTRONICS AND ELECTRICAL ENGINEERS, THE INSULATED CABLE ENGINEERS, THE AMERICAN SOCIETY OF TESTING MATERIALS, THE AMERICAN NATIONAL STANDARD INSTITUTE, THE NATIONAL FIRE PROTECTION ASSOCIATION, THE REQUIREMENTS OF THE OCCUPATIONAL SAFETY AND HEALTH ADMINISTRATION AND ALL OTHER APPLICABLE FEDERAL STATE AND LOCAL LAWS AND/OR ORDINANCES, INCLUDING THE INTERNATIONAL BUILDING CODE AND THE NJ AMENDMENTS TO THE NATIONAL ELECTRICAL CODE.

2. ALL MATERIAL AND EQUIPMENT SHALL BE NEW AND BEAR THE INSPECTION LABELS OF UNDERWRITERS LABORATORIES, IF THE MATERIAL AND EQUIPMENT IS OF THE CLASS INSPECTED BY SAID LABORATORIES.

3. ANY REQUIREMENTS IN THE SPECIFICATIONS, OR DRAWINGS, INTERPRETED TO DEVIATE FROM THE REQUIREMENTS OF THE NATIONAL ELECTRICAL CODE OR OSHA SHALL BE REFERRED TO THE ENGINEER FOR CONSIDERATION. ALL WORK PERFORMED SHALL ADHERE TO ALL RULES, REQUIREMENTS AND SPECIFICATIONS AS SET FORTH ABOVE. ANY ADDITIONAL WORK OR MATERIAL NECESSARY FOR ADHERENCE WILL NOT BE ALLOWED AS AN EXTRA BUT SHALL BE INCLUDED IN THE BID PRICE.

4. THE DRAWINGS SHOW THE APPROXIMATE LOCATION OF ALL APPARATUS, THE EXACT LOCATIONS OF WHICH ARE SUBJECT TO THE APPROVAL OF THE DIRECTORS REPRESENTATIVE, WHO RESERVE THE RIGHT TO MAKE ANY REASONABLE CHANGES IN THE LOCATION INDICATED WITHOUT EXTRA COST. WHILE THE GENERAL RUN OF CONDUIT OR RACEWAY IS NOT SHOWN ON THE DRAWINGS, IT IS INTENDED THAT THE EXACT ROUTING AND LOCATIONS OF ALL CONDUIT OR RACEWAY BE DETERMINED IN THE FIELD BASED ON ACTUAL FIELD CONDITIONS. WHERE HUNG CEILING EXISTS, CONDUIT SHALL BE RUN ABOVE THE CEILING TILES. IN AREAS WHERE NO FINISHED CEILINGS EXIST EXPOSED SURFACE MOUNTED CONDUIT OR WIREMOLD RACEWAYS CAN BE USED.

5. CONDUIT OR RACEWAY RUN SHALL BE PARALLEL WITH OR AT RIGHT ANGLES TO WALLS AND CEILINGS. THEY SHALL BE SUPPORTED ON APPROVED TYPES OF BRACKETS, TRAPEZE, HANGERS OR PIPE STRAPS. SECURED BY MEANS OF WOOD SCREWS ON WOOD CONSTRUCTION, NAILS ARE NOT PERMITTED. USE TOGGLE BOLTS FOR HOLLOW MASONRY, EXPANSION BOLTS FOR BRICK MASONRY, PHILLIPS HILTI CORP. ANCHORS FOR CONCRETE WORK SUPPORT SPACINGS SHALL BE AS SET FORTH IN THE NATIONAL ELECTRICAL CODE.

6. THE TYPE OF CONDUIT AND RACEWAY SHALL BE AS FOLLOW, UNLESS OTHERWISE SPECIFIED:
   MINIMUM CONDUIT SIZE 3/4" RIGID GALVANIZED STEEL CONDUIT. MINIMUM SURFACE RACEWAY WIREMOLD CATALOG NO. V500.

APPLICATION	TYPE OF CONDUIT
SURFACE MOUNTED FINISHED AREA	WIREMOLD
CONCEALED FINISHED AREA OR RUNS WITHIN EXISTING WALLS	GREENFIELD (3/4" TRADE SIZE)
SURFACE MOUNTED UNFINISHED AREAS	ELECTRICAL METALLIC TUBING
RUNS ABOVE HUNG CEILING	ELECTRICAL METALLIC TUBINGEXPOSED OR
CONCEALED OUTDOORS	RIGID GALVANIZED STEEL

7. PROVIDE MINIMUM #12 AWG COPPER WIRING FOR POWER AND LIGHTING SYSTEMS, INSTALLED IN 3/4" CONDUIT MINIMUM, UNLESS OTHERWISE NOTED OR SPECIFIED.

8. COORDINATE THE LOCATION OF ALL ELECTRICAL EQUIPMENT, RACEWAYS, ETC. SO AS TO AVOID INTERFERENCES WITH DUCTWORK, PIPING, STRUCTURES, ETC. MAINTAIN ADEQUATE ACCESS TO ALL JUNCTIONS, TERMINATIONS AND PULL BOXES. MAINTAIN ADEQUATE ACCESS TO ALL EQUIPMENT FOR OPERATION, MAINTENANCE AND REPAIRS.

9. PROVIDE EXPANSION FITTINGS IN ALL ELECTRICAL RACEWAY RUNS WHERE THEY CROSS BUILDING EXPANSION LINES.

10. PROVIDE PULL BOXES AS REQUIRED BY CODE AND SPECIFICATIONS.

11. ALL SCAFFOLDING, TOOLS, CONDUIT, WIRE AND SCRAP WHICH IS NO LONGER REQUIRED IN THE WORK AREAS SHALL BE REMOVED FROM THE JOB SITE.

12. UPON COMPLETION OF THE WORK UNDER THIS CONTRACT, ALL CERTIFICATE(S) OF INSPECTION AND APPROVAL FROM THE NATIONAL BOARD OF FIRE UNDERWRITERS AND/OR SIMILAR STATE OR LOCAL INSPECTION ORGANIZATION HAVING JURISDICTION SHALL BE OBTAINED AND DELIVERED TO THE USPS OR THE ENGINEER.

13. THE CONTRACTOR SHALL GUARANTEE ALL WORKMANSHIP AND MATERIALS FOR A PERIOD OF ONE (1) YEAR FROM THE DATE OF FINAL ACCEPTANCE BY THE ENGINEER AND USPS.

14. INSTALL FIRESTOPPING AT PENETRATIONS OF FIRE RATED WALL MATERIALS BY SLEEVES, PIPING, CONDUIT AND OTHER ITEMS IN ACCORDANCE WITH MANUFACTURER'S PUBLISHED INSTRUCTIONS.

ABBREVIATIONS

A	AMPERE
AF	AMPERE FRAME
AFF	ABOVE FINISHED FLOOR
AIC	AMPERE INTERUPTING CAPACITY
AT	AMPERE TRIP
AWG	AMERICAN WIRE GUAGE
BF	BALLAST FACTOR
BOF	BOTTOM OF FIXTURE
C	CONDUIT
C/B	CIRCUIT BREAKER
CKT	CIRCUIT
D	DEPTH
DIA	DIAMETER
DISC	DISCONNECT
DIST	DISTRIBUTION
DIV	DIVISION
DWG	DRAWING
(E)	EXISTING EQUIPMENT/DEVICE TO REMAIN
EC	ELECTRICAL CONTRACTOR
(ER)	EXISTING EQUIPMENT/DEVICE TO BE RELOCATED
FIXT	FIXTURE
FLUOR	FLUORESCENT
FT	FEET
G	GROUND
H	HEIGHT
HID	HIGH INTENSITY DISCHARGE
INCAND	INCANDESCENT
IS	INSPECTION SERVICES
JB	JUNCTION BOX
K	KELVIN
KVA	KILO-VOLT-AMPERE
KW	KILO-WATT
LLF	LIGHT LOSS FACTOR
LTG	LIGHTING
MAX	MAXIMUM
MH	METAL HALIDE
MIN	MINIMUM
MTD	MOUNTED
(N)	NEW
NEC	NATIONAL ELECTRICAL CODE
NIC	NOT IN CONTRACT
P	POLE
PNL	PANEL
QTY	QUANTITY
(R)	EXISTING EQUIPMENT/DEVICE TO BE REMOVED
(RE)	RELOCATED EXISTING EQUIPMENT/DEVICE
SW	SWITCH
SWBD	SWITCH BOARD
TEMP	TEMPORARY
TOF	TOP OF FIXTURE
TYP	TYPICAL
UL	UNDERWRITER'S LABORATORIES
UON	UNLESS OTHERWISE NOTED
USPS	UNITED STATES POSTAL SERVICE
USPIS	UNITED STATES POSTAL INSPECTION SERVICE
V	VOLTS
VA	VOLT-AMPERES
W	WATT OR WIDTH
WP	WEATHERPROOF

SYMBOLS

POWER

SYMBOL	DESCRIPTION
	DUPLEX RECEPTACLE (NEMA 5-20R) – MOUNT +18" AFF, UON.
	QUADRUPLEX RECEPTACLE (NEMA 5-20R) – MOUNT +18" AFF, UON.
	TELECOMMUNICATION OUTLET – MOUNT +18" AFF, PROVIDE CONDUIT TO CEILING SPACE. PROVIDE CABLE TO MDF ROOM.
	WALL MOUNTED JUNCTION OR OUTLET BOX – MOUNT +18" AFF, USE AS INDICATED.
J	JUNCTION BOX
	PANELBOARD – 480/277 VOLT
	PANELBOARD – 208/120 VOLT
T	TRANSFORMER
B	BELL OR BUZZER– MOUNT 7'-6" AFF.
	PUSHBUTTON – MOUNT +48" AFF.
	DISCONNECT SWITCH – MOUNT +48" AFF.

WIRING

	WIRING CONCEALED IN WALL OR ABOVE
	WIRING CONCEALED IN FLOOR
	WIRING EXPOSED
LR-1,3	ELECTRICAL HOMERUN. ARROWS INDICATE NUMBER OF CIRCUITS IN DESIGNATED PANEL. NUMBER OF SLASHES INDICATE NUMBER OF CONDUCTORS WHEN MORE THAN TWO. SIZE #12 MINIMUM UNLESS OTHERWISE NOTED. PROVIDE GROUND CONDUCTORS IN ALL CIRCUITS (NOT INDICATED).
	CONDUIT TURNED UP
	CONDUIT TURNED DOWN
UG	UNDERGROUND CONDUIT
	ELECTRICAL GROUND

LIGHTING

	WALL MOUNTED EXIT LIGHT
	SURFACE MOUNTED DOUBLE SIDED EXIT LIGHT
	LED LIGHT FIXTURE
	WALL MOUNTED LED LIGHT FIXTURE
	LED LIGHT FIXTURE WITH EMERGENCY BATTERY BACKUP

DEMOLITION NOTES

1. CONTRACTOR SHALL BE FULLY RESPONSIBLE TO MAINTAIN SERVICE OF THE ELECTRICAL SYSTEMS AFFECTED BY THIS WORK.
2. CONTRACTOR SHALL BE RESPONSIBLE TO ASCERTAIN THE CURRENT CONDITIONS SHOWN ON THE DEMOLITION DRAWINGS.
3. EXCEPT AS NOTED, REMOVE ALL ACCESSIBLE WIRING AND CONDUIT THAT BECOMES INACTIVE DUE TO THE REMOVAL OF EXISTING EQUIPMENT.
4. INACCESSIBLE CONDUITS SHALL BE CAPPED FLUSH WITH WALL/FLOOR AND LEFT IN PLACE.
3. EXCEPT AS NOTED, REMOVALS SHALL ALSO INCLUDE INACTIVE EQUIPMENT (NOT SHOWN) ASSOCIATED WITH THE APPARATUS BEING REMOVED (I.E. JUNCTION BOXES, ETC.).
5. REMOVED EQUIPMENT/DEVICES SHALL BE PROPERLY DISCARDED OR TURNED OVER TO OWNER, AS DIRECTED BY OWNER'S REPRESENTATIVE.

WORK SUMMARY

GENERAL:

1. THIS IS A SUMMARY OF THE SCOPE OF WORK FOR THIS PROJECT AND DOES NOT NECESSARILY INCLUDE ALL WORK ITEMS NECESSARY FOR THE SUCCESSFUL EXECUTION OF THIS CONTRACT.
2. WORK FOR THIS PROJECT WAS DESIGNED BASED UPON THE USPS SCOPE OF WORK AS UNDERSTOOD BY AECOM TECHINCAL SERVICES WITHOUT THE AFORMENTIONED PLAN.
3. DEVELOP AND EXECUTE A WORK SCHEDULE IN COORDINATION WITH THE FACILITY SUCH THAT THE WORK SHALL NOT DETRIMENTALLY AFFECT THE ON-GOING OPERATION OF THE FACILITY.
4. REFER TO SPECIFICATIONS FOR GENERAL WORK REQUIREMENTS.

A. ELECTRIC VEHICLE CHARGING INSTALLATION AT NORTHERN VIRGINIA VMF:

1. REMOVE EXISTING LIGHT FIXTURES IN VEHICLE REPAIR (ROOM 100), WASH BAY (ROOM 101), TIRE ROOM (ROOM 112), PAINT SHOP (ROOM 113) AND TIRE STORAGE (ROOM 115).
2. INSTALL NEW LED LIGHT FIXTURES IN VEHICLE REPAIR (ROOM 100), WASH BAY (ROOM 101), TIRE ROOM (ROOM 112), PAINT SHOP (ROOM 113) AND TIRE STORAGE (ROOM 115).
3. INSTALL TWO (2) MINI POWER ZONES AT NEW PARKING SPACES SHOWN.
4. INSTALL TWO (2) 19.2KW SINGLE PORT CHARGING STATIONS AT NEW PARKING SPACES.
5. INSTALL ALL CONDUIT AND WIRE AS INDICATED ON PLANS FOR FULLY FUNCTIONAL ELECTRIC VEHICLE CHARGING.
6. PATCH AND RESTORE EXISTING SURFACES AND CONDITIONS AFFECTED BY THE DEMOLITION AND NEW WORK.

© Copyright 1997-2008, United States Postal Service

AECOM
1255 Broad Street
Clifton, NJ 07013-8591
(973) 883-8500 tel
(973) 883-8501 fax
www.aecom.com

USPS - NORTHERN VIRGINIA VMF
2935 PROSPERITY AVE
FAIRFAX, VIRGINIA, 22031

UNITED STATES POSTAL SERVICE

E0.01 ELECTRICAL GENERAL NOTES

Scale: NONE Date: 09/02/2026 Revisions:
Project:
USPS File Number: K33601 Document Release:

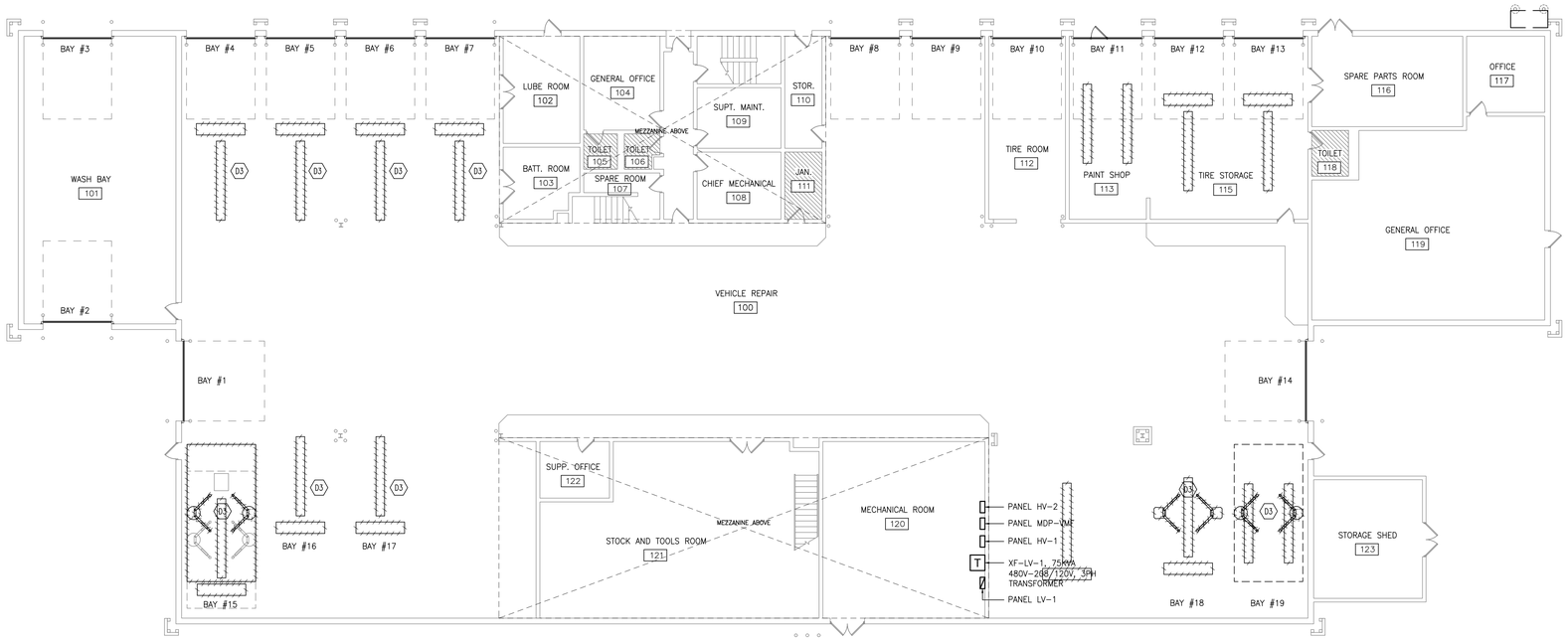

1 E1.00 NORTHERN VIRGINIA VMF DEMOLITION FLOOR PLAN

SCALE: 3/32" = 1'-0"

0 8' 16' 24

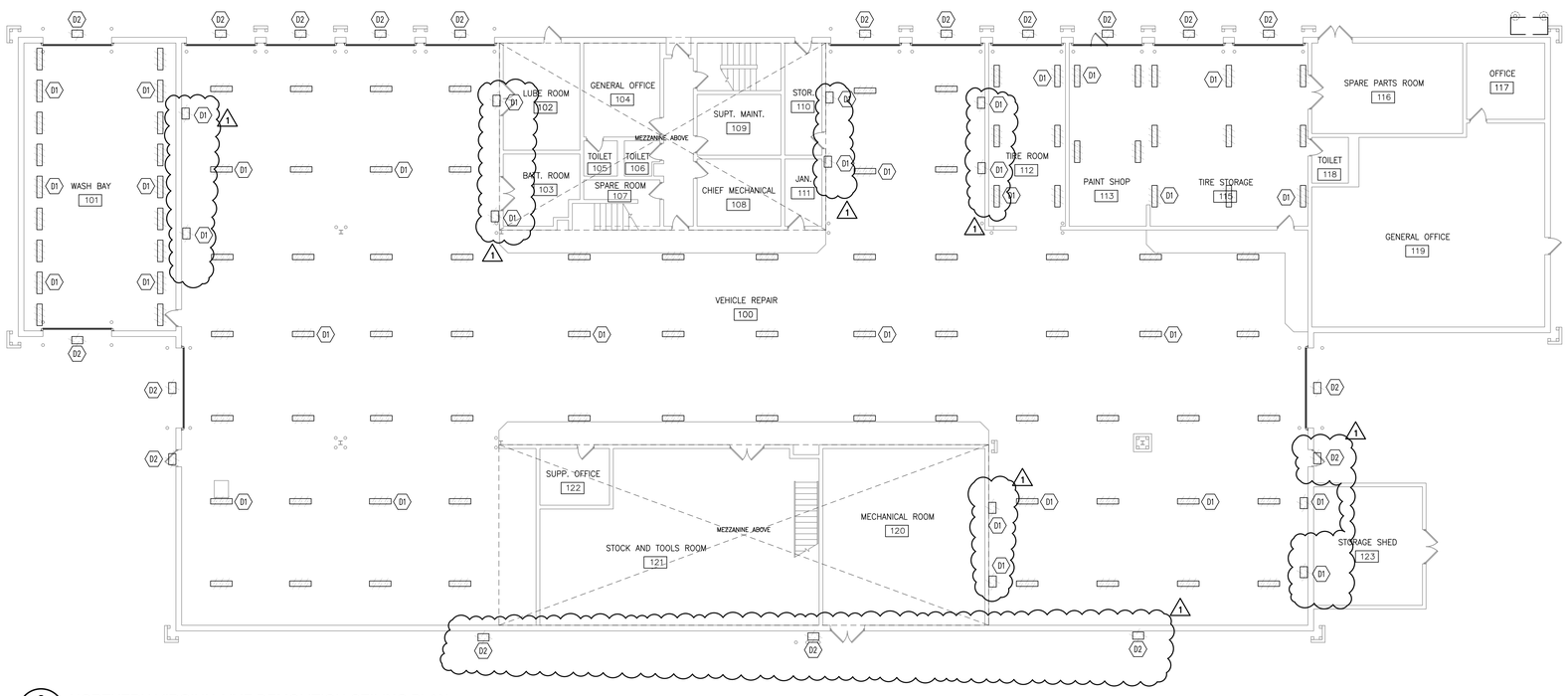

2 E1.00 NORTHERN VIRGINIA VMF DEMOLITION CEILING PLAN

SCALE: 3/32" = 1'-0"

0 8' 16' 24

GENERAL NOTES:

1. REFER TO DRAWING E0.01 FOR ELECTRICAL SYMBOLS, ABBREVIATIONS, AND ADDITIONAL GENERAL NOTES.

KEY NOTES:

(DX) 'X' DENOTES KEY NOTE NUMBER BELOW

1. DISCONNECT AND REMOVE EXISTING LIGHT FIXTURES IN WORKROOM AREA. SAFE-OFF WIRING FOR REUSE.
2. DISCONNECT AND REMOVE EXISTING EXTERIOR LIGHT FIXTURES MOUNTED ON BUILDING. SAFE-OFF WIRING FOR REUSE.
3. LIFTS NOT IN SCOPE, EXCEPT AS KEY NOTES INDICATED.

© Copyright 1997-2008, United States Postal Service

AECOM
1255 Broad Street
Clifton, NJ 07013-3591
(973) 883-8500 tel (973) 883-8501 fax
www.aecom.com

USPS - NORTHERN VIRGINIA VMF
2935 PROSPERITY AVE
FAIRFAX, VIRGINIA, 22031

UNITED STATES POSTAL SERVICE

E1.00 VMF ELECTRICAL DEMOLITION FLOOR PLAN

Scale: 3/32"=1'-0" Date: 09/02/2026 Revisions: 2026-11-13 ADDENDUM #1

Project: Document Release:

USPS File Number: K33601

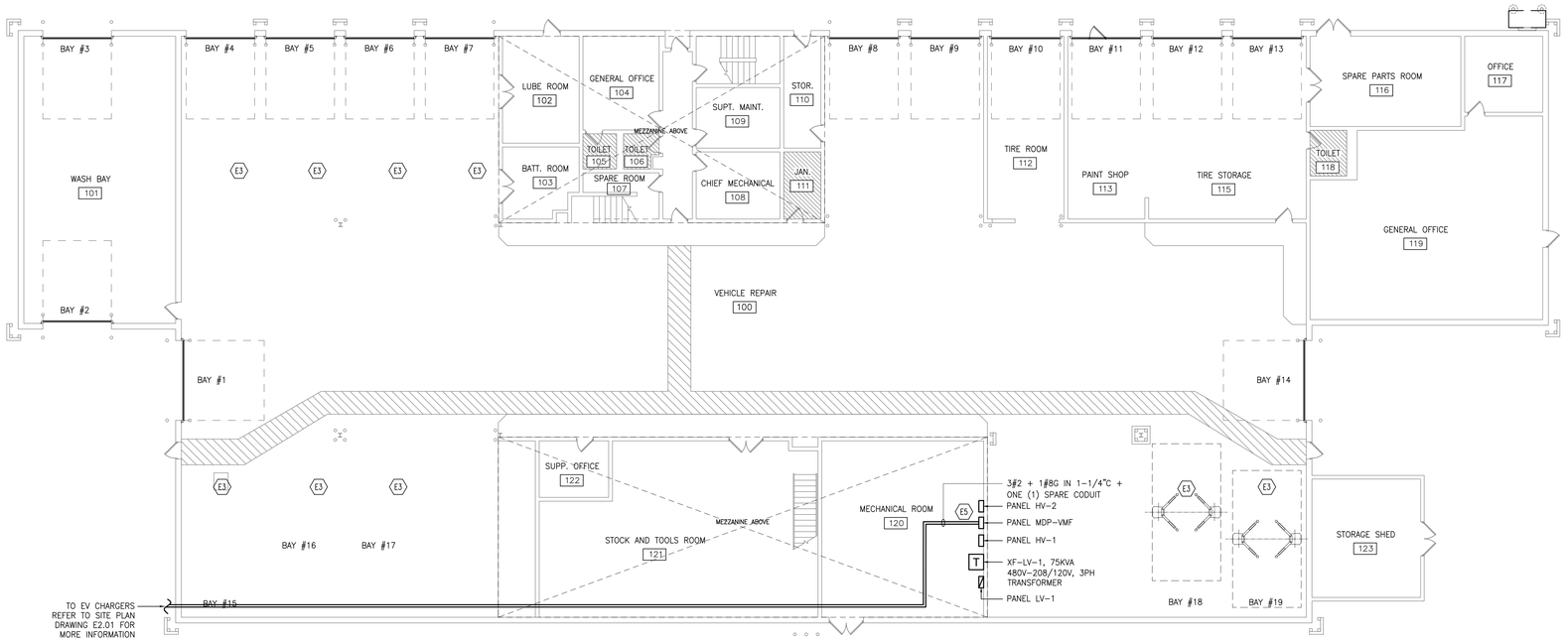

1 E2.00 NORTHERN VIRGINIA VMF ELECTRICAL FLOOR PLAN

SCALE: 3/32" = 1'-0"

0 8' 16' 24

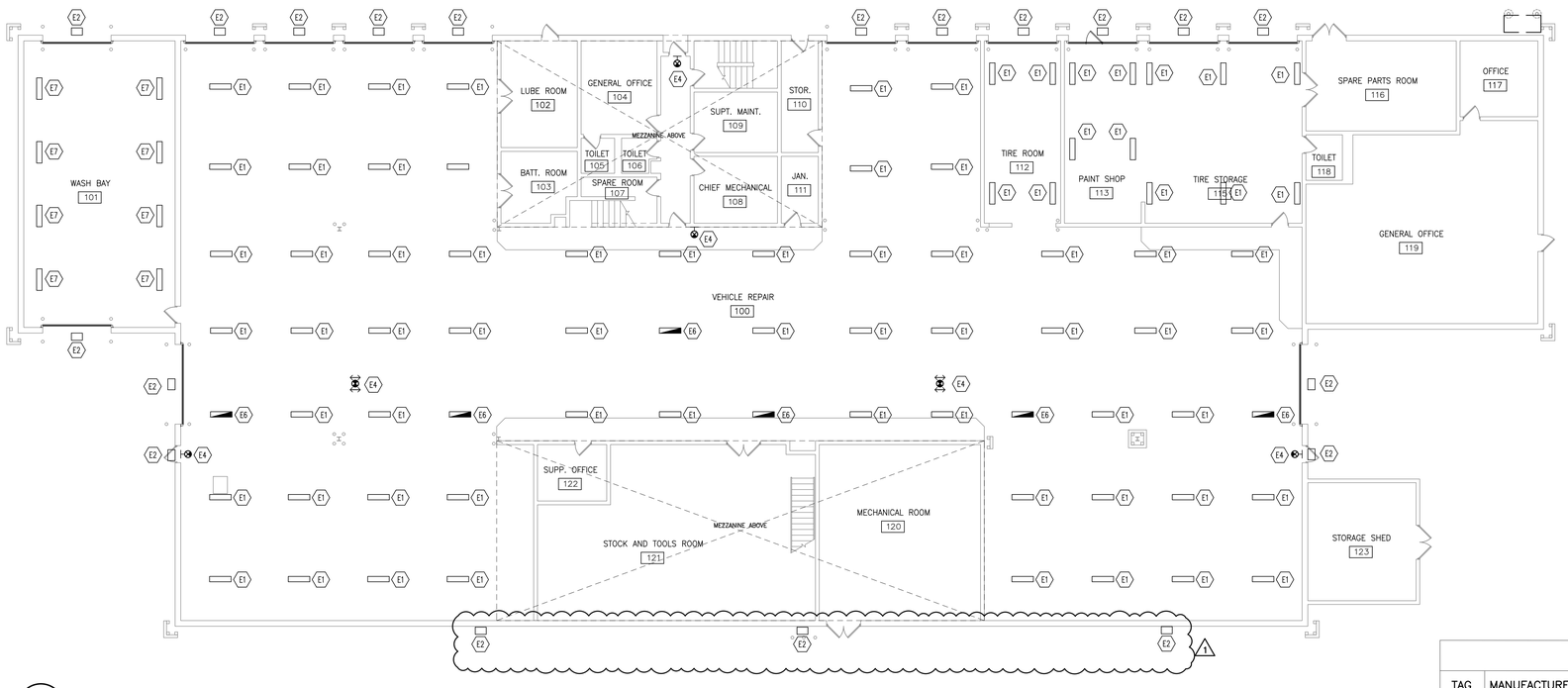

2 E2.00 NORTHERN VIRGINIA VMF ELECTRICAL CEILING PLAN

SCALE: 3/32" = 1'-0"

0 8' 16' 24

GENERAL NOTES:

1. REFER TO DRAWING E0.01 FOR ELECTRICAL SYMBOLS, ABBREVIATIONS, AND ADDITIONAL GENERAL NOTES.
2. CONDUITS FOR MINI-POWER ZONES SHALL BE ROUTED FROM PANEL MDP-VMF TO CHARGING LOCATION BY UNDERGROUND ROUTING. ROUTING AREA TO BE COORDINATED WITH USPS AND EXCAVATED DURING ROUTING AND BACKFILLED AND REPAIRED UPON COMPLETION OF CONDUIT ROUTING.
3. INSTALL A NEW WIRED TOGGLE SWITCH (1P, 2-WAY) TO PROVIDE MANUAL OVERRIDE FUNCTIONALITY FOR THE EXISTING OCCUPANCY SENSORS/SENSOR SWITCHES IN THE VEHICLE REPAIR ROOM.
4. FOR EACH EXISTING LIGHT CONTROL SWITCH IN THE WORK AREA, PROVIDE AND INSTALL A NEW OCCUPANCY SENSOR. REWIRE THE EXISTING LIGHT SWITCH CIRCUIT TO ALLOW THE EXISTING SWITCH TO ACT AS A MANUAL OVERRIDE FOR THE NEWLY INSTALLED OCCUPANCY SENSOR.
5. IF THERE IS NO CONTINUOUS POWER FEED FOR WHERE NEW LIGHT FIXTURES WITH BATTERY BACKUP TO BE INSTALLED, CONTRACTOR SHALL INSTALL A NEW WIRE WITH CONDUIT FROM EXISTING LIGHTING POWER SOURCE TO FIRST NEW BATTERY BACKUP LIGHT FIXTURE. NEW WIRE WITH CONDUIT CAN BE DAISY-CHAINED FROM FIRST NEW LIGHT FIXTURE DIRECTLY TO REMAINING NEW LIGHT FIXTURES WITH BATTERY BACKUP. NEW WIRE SIZE SHALL BE 1C-#12 AWG IN NEW CONDUIT SIZE 3/4" RGS.

KEY NOTES:

EX 'X' DENOTES KEY NOTE NUMBER BELOW

1. FURNISH AND INSTALL PENDANT MOUNTED LED LIGHT FIXTURE AS SHOWN. EXTEND EXISTING WIRING AND CONDUIT FROM EXISTING LIGHTING CIRCUIT AS REQUIRED OR CONNECT TO NEAREST EXISTING PENDANT MOUNTED LIGHTING CIRCUIT VIA 2#12 + 1#12G IN 3/4" FOR CONNECTION TO NEW FIXTURE. LIGHT FIXTURE SHALL BE LITHONIA LIGHTING #XIB-L24-24000LM-ATWD-GZ10-50K-90CRI OR APPROVED EQUAL.
2. FURNISH AND INSTALL SURFACE MOUNTED LIGHT FIXTURE IN SAME LOCATION AS EXISTING AS SHOWN. EXTEND WIRING AND CONDUIT AS REQUIRED FOR CONNECTION TO NEW FIXTURE. LIGHT FIXTURE SHALL BE LITHONIA LIGHTING #TWR2-LED-AL0-SWW2-UVOLT-PE-DDBTXD OR APPROVED EQUAL.
3. LIFTS NOT IN SCOPE, EXCEPT AS KEY NOTES INDICATED.
4. FURNISH AND INSTALL NEW EXIT LIGHT FIXTURE WITH EMERGENCY BATTERY BACKUP AT LOCATION SHOWN. EXTEND WIRING AND CONDUIT FROM EXISTING EXIT FIXTURES TO CONNECT TO NEW FIXTURE. FOR FINAL LOCATION OF EXIT LIGHTS REFER TO VMF LIFE SAFETY PLAN (G0.02). LIGHT FIXTURE SHALL BE LEGRAND KENALL METDU/METSW SERIES WITH BATTERY BACKUP OR APPROVED EQUAL.
5. EC TO PROVIDE TWO (2) SPARES WITH TWO (2) 100A-2P CIRCUIT BREAKERS IN PANEL MDP-VMF. CONNECT 100A-2P CIRCUIT BREAKER WITH TWO (2) MINI POWER ZONES OF 100A EACH.
6. FURNISH AND INSTALL EMERGENCY LIGHT FIXTURE ALONG PATH OF EGRESS AS SHOWN. EXTEND WIRING AND CONDUIT FROM EXISTING LIGHTING CIRCUIT AS REQUIRED FOR THE CONNECTION TO THE NEW FIXTURE. LIGHT FIXTURE SHALL BE XIB-L24-24000LM-ATWD-GZ10-40K-90CRI-E18WCPHECW OR APPROVED EQUAL.
7. FURNISH AND INSTALL PENDANT MOUNTED WEATHERPROOF LED LIGHT FIXTURE AS SHOWN. EXTEND EXISTING WIRING AND CONDUIT FROM EXISTING LIGHTING CIRCUIT AS REQUIRED FOR CONNECTION TO NEW FIXTURE. LIGHT FIXTURE SHALL BE LITHONIA LIGHTING XIB-L24-24000LM-ATWD-50K-90CRI-NSG OR APPROVED EQUAL OR APPROVED EQUAL.

LUMINARIES SCHEDULE

TAG	MANUFACTURER	MODEL	QUANTITY	MOUNTING TYPE	LOCATION
E1	LITHONIA LIGHTING	XIB-L24-24000LM-ATWD-GZ10-50K-90CRI OR APPROVED EQUAL	73	PENDANT	INTERNAL
E2	LITHONIA LIGHTING	TWR2-LED-ALO-SWW2-UVOLT-PE-DDBTXD OR APPROVED EQUAL	19	SURFACE	EXTERNAL
E4	LEGRAND	LEGRAND KENALL METDU/METSW SERIES WITH BATTERY BACKUP OR APPROVED EQUAL.	06	WALL/PENDANT	EXTERNAL
E6	LITHONIA LIGHTING	XIB-L24-24000LM-ATWD-GZ10-50K-90CRI-E18WCPHECW OR APPROVED EQUAL	06	PENDANT	INTERNAL
E8	LITHONIA LIGHTING	XIB-L24-24000LM-ATWD-50K-90CRI-NSG OR APPROVED EQUAL	08	PENDANT	INTERNAL

© Copyright 1997-2008, United States Postal Service

AECOM
1255 Broad Street
Clifton, NJ 07013-8991
(973) 883-8500 tel (973) 883-8501 fax
www.aecom.com

USPS - NORTHERN VIRGINIA VMF
2935 PROSPERITY AVE
FAIRFAX, VIRGINIA, 22031

UNITED STATES POSTAL SERVICE

E2.00 VMF ELECTRICAL FLOOR PLAN

Scale: 3/32"=1'-0" Date: 09/02/2026 Revisions: 2026-11-13 ADDENDUM #1
Project: USPS File Number: K33603 Document Release:

GENERAL NOTES:

1. REFER TO DRAWING E0.01 FOR ELECTRICAL SYMBOLS, ABBREVIATIONS, AND ADDITIONAL GENERAL NOTES.
2. CONDUITS FOR MINI-POWER ZONES SHALL BE ROUTED FROM PANEL MDP-VMF TO CHARGING LOCATION BY UNDERGROUND ROUTING. ROUTING AREA TO BE COORDINATED WITH USPS AND EXCAVATED DURING ROUTING AND BACKFILLED AND REPAIRED UPON COMPLETION OF CONDUIT ROUTING.

KEY NOTES:

(XX) 'X' DENOTES KEY NOTE NUMBER BELOW

1. ELECTRICAL CONDUITS TO BE ROUTED TO CHARGER LOCATIONS VIA TRENCH. PROVIDE ONE (1) 1-1/4" SPARE CONDUIT FOR FUTURE USE. REFER TO DRAWING E3.00 FOR CONDUIT ROUTING UNDER PAVED AREAS. EXCAVATION PATHS SHALL BE COORDINATED WITH GC. PHASING OF EXCAVATION/SAW CUTTING SHALL BE COORDINATED WITH GC AS TO NOT AFFECT NEW PAVEMENT AND STRAPPING WORK.
2. PROVIDE MOUNTING FOR 25 KVA MINI POWER ZONE. REFER TO E3.00. COORDINATE WITH EQUIPMENT DRAWINGS FOR CLEARANCE AND INSTALLATION INSTRUCTIONS.
3. EC HAS TO TAKE NECESSARY STEPS TO INSTALL THE OUTDOOR PULL BOX TO CONNECT THE UNDERGROUND SPARE CONDUIT FOR FUTURE USE AS INDICATED ON THE PLAN.

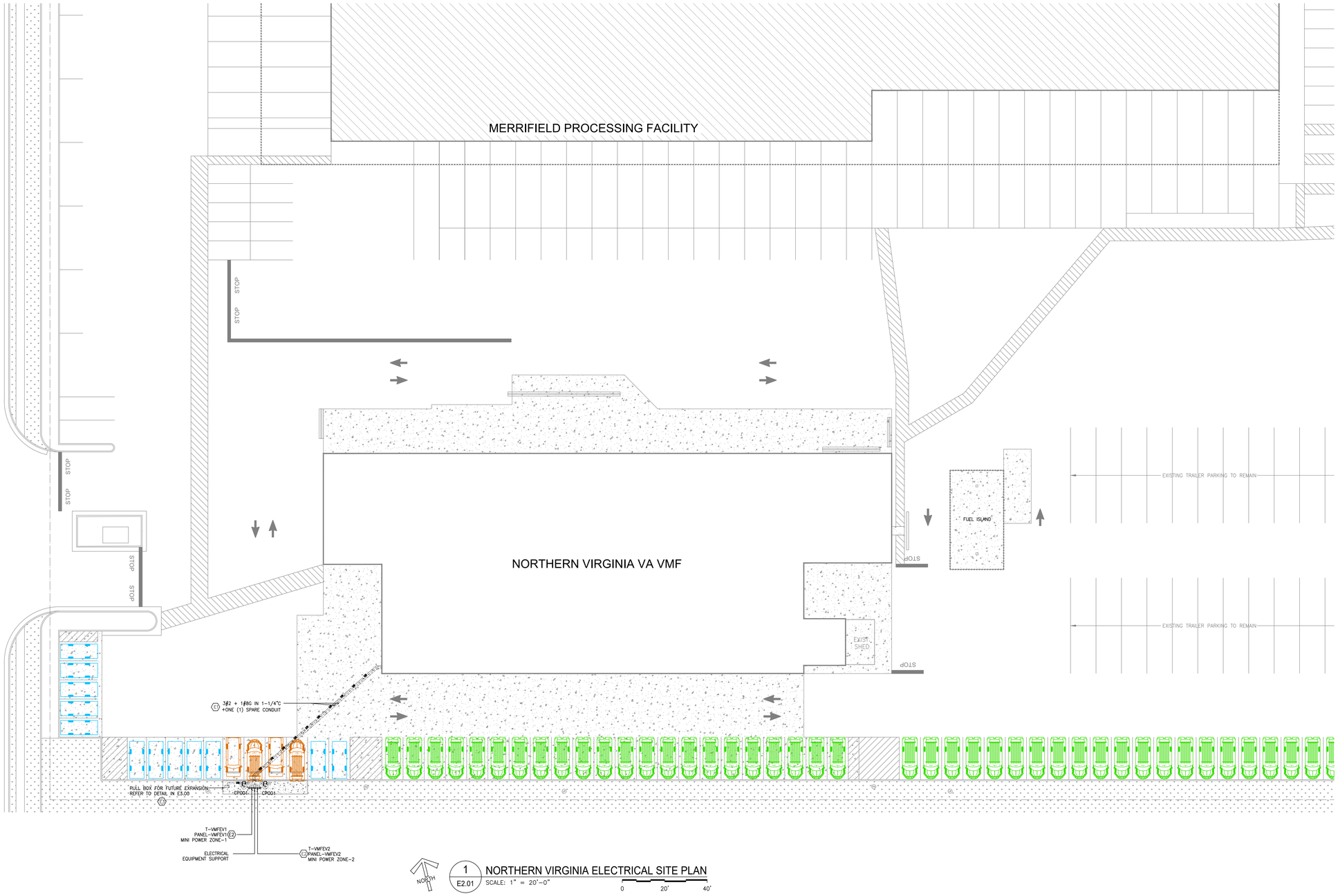

1 / E2.01 NORTHERN VIRGINIA ELECTRICAL SITE PLAN
SCALE: 1" = 20'-0"
0 20' 40'

© Copyright 1997-2008, United States Postal Service

AECOM
1255 Broad Street
Clifton, NJ 07013-8591
(973) 883-8500 tel (973) 883-8501 fax
www.aecom.com

UNITED STATES POSTAL SERVICE

USPS - NORTHERN VIRGINIA VMF
2935 PROSPERITY AVE
FAIRFAX, VIRGINIA, 22031

E2.01 VMF ELECTRICAL SITE PLAN

Scale: 1" = 20'-0"
Project:
USPS File Number: KA3601
Date: 09/02/2026
Revisions:
Document Release:

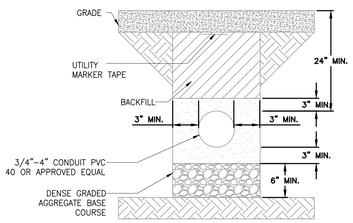

CONDUIT ROUTING UNDER PAVED AREA

N.T.S.

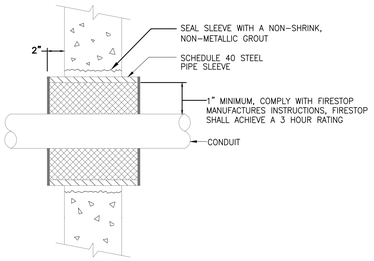

CONDUIT PENETRATION OF WALLS (TYPICAL)

N.T.S.

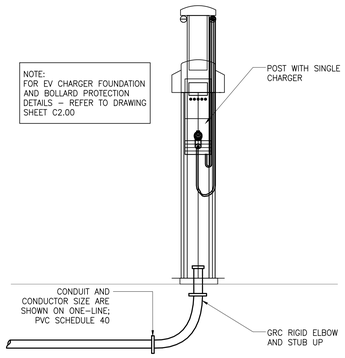

EV CHARGER HARDWARE LIST	
TYPE	COUNT
SINGLE CIRCUIT POST	2

CHARGE POINT CP6011B
POWER FACTOR AND EFFICIENCY INFORMATION IS NOT AVAILABLE. TO SIMPLIFY DESIGN, CHARGER OUTPUT VALUES (PROVIDED BY MANUFACTURER IN kW) HAVE BEEN CONVERTED TO kVA USING A POWER FACTOR AND EFFICIENCY OF 1. THE CHARGER OUTPUT VALUE IS CONSIDERED TO BE THE MAXIMUM POSSIBLE OUTPUT TO THE EV.

REFER TO MANUFACTURER INSTALLATION INSTRUCTIONS FOR VOLTAGE SHOWN ON EVSE SCHEDULE FOR ELECTRICAL CONNECTIONS. PROVIDE OUTPUT SETTING AT 80A AT EACH CHARGER. USPS TO PROVIDE COMMISSIONING AND ENERGY MANAGEMENT SYSTEM.

CHARGER CONDUIT ROUTING

N.T.S.

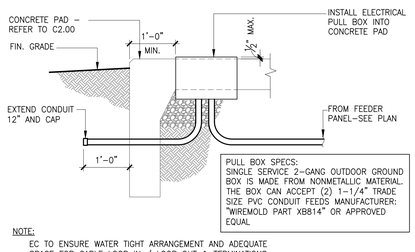

NOTE:
EC TO ENSURE WATER TIGHT ARRANGEMENT AND ADEQUATE SPACE FOR CABLE LOOP IN / LOOP OUT & TERMINATIONS.

ELECTRICAL PULL BOX DETAIL AT CONCRETE PAD

N.T.S.

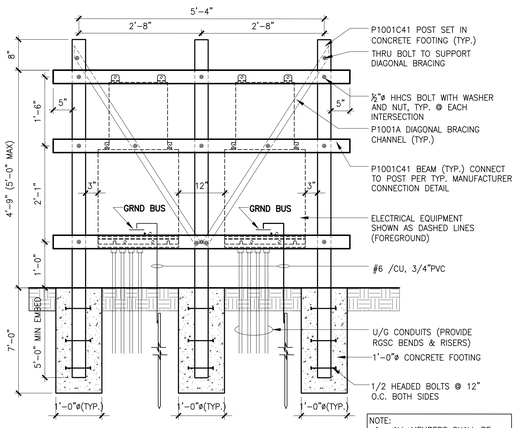

NOTE:
1. ALL MEMBERS SHALL BE 12GA MIN. GALVANIZED STEEL
2. 500 LBS PER ELECTRICAL BOX

RACK DETAIL

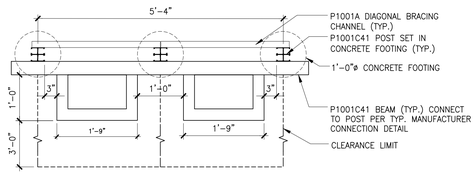

PLAN VIEW
ELECTRICAL EQUIPMENT SUPPORT

N.T.S.

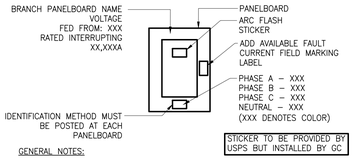

GENERAL NOTES:

A. WHEN MORE THAN ONE NORMAL VOLTAGE SYSTEM SUPPLIES THE PREMISES THE FOLLOWING MUST BE APPLIED PER NFPA 70.
   a. ALL DISTRIBUTION EQUIPMENT AS DEFINED BY NFPA 70 SHALL BE IDENTIFIED BY SYSTEM.
   b. IDENTIFICATION OF BRANCH CIRCUITS MUST BE IDENTIFY BY COLOR CODING, TAGGING, MARKING TAPE OR APPROVED MEANS AND SHALL BE PERMANENTLY POSTED AT BRANCH CIRCUIT PANELBOARD OR SIMILAR BRANCH CIRCUIT DISTRIBUTION EQUIPMENT.
B. CONTENTS OF LABELS SHOW IN DETAIL ARE EXAMPLES ONLY. REFER TO SPECIFICATIONS FOR EXACT REQUIREMENTS OF EACH LABEL.

PANEL IDENTIFICATION DETAIL

N.T.S.

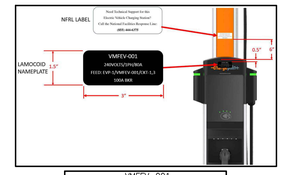

VMFEV-001
240V/1PH/80A
FEED: EVP-1/VMFEV-001/CKT-1,3
100A BKR

EVSE CHARGING UNIT LABEL

Need Technical Support for this
Electric Vehicle Charging Station?
Call the National Facilities Response Line:
(855) 444-6375

NFRL SUPPORT LABEL

NFRL LABEL IS TO BE FURNISHED BY USPS AND INSTALLED BY EC.

NOTES:

1. ADHERE SINGLE SELF ADHESIVE LAMOCOID NAMEPLATE TO EACH EVSE AS SHOWN IN THE DIAGRAM. CLEAN SURFACES BEFORE APPLICATION
2. NAMEPLATE SHALL BE BLACK BACKGROUND AND ENGRAVED WITH WHITE LETTERS.
3. CENTER AND ADHERE NFRL LABEL ON EVSE PEDESTAL AS SHOWN IN THE DIAGRAM.

VMFEV LABEL

N.T.S.

TRANSFORMER SCHEDULE									
IDENTIFICATION	KVA	PRIMARY VOLTAGE	SECONDARY VOLTAGE	PHASE	MOUNTING STYLE	LOCATION	K-RATING	WINDINGS	TEMPERATURE RATING	NOTES
T-VMFEV1	25	480 V	240 V	1	STEEL STRUCTURE	PARKING LOT OF VMF	STD	COPPER	150°C	
T-VMFEV2	25	480 V	240 V	1	STEEL STRUCTURE	PARKING LOT OF VMF	STD	COPPER	150°C	

NOTE: STOCK OPTIONS HAVE BEEN SPECIFIED DUE TO CONSTRUCTION SCHEDULE.

EVSE SCHEDULE							
EVSE #	USPS KIT #	MCB	OUTPUT (VA)	PANEL	CIRCUITS	DESCRIPTION	MODEL
1	CP001	240V, 1ø – 80A (100A BREAKER)	19,200	MINI POWER ZONE	–	SINGLE PORT, PEDESTAL MOUNT, WITH INCLUDED 23' CABLE	CP6011B-80A-L7
2	CP001	240V, 1ø – 80A (100A BREAKER)	19,200	MINI POWER ZONE	–	SINGLE PORT, PEDESTAL MOUNT, WITH INCLUDED 23' CABLE	CP6011B-80A-L7

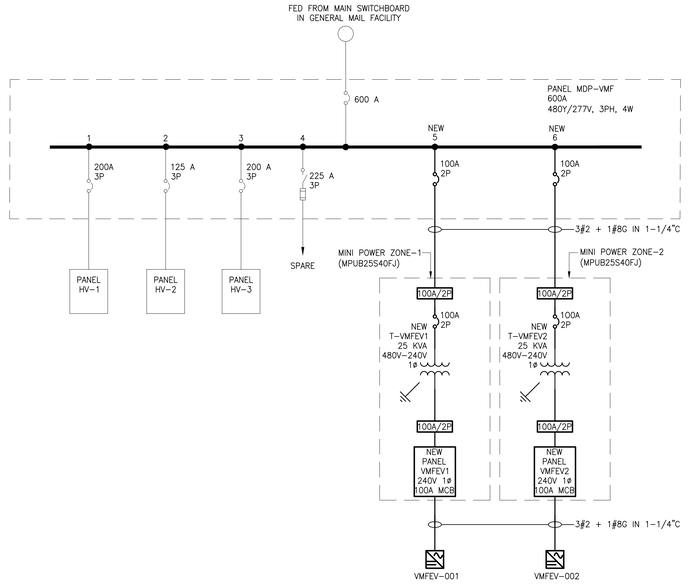

VMF ONE-LINE DIAGRAM

N.T.S.

© Copyright 1997–2008, United States Postal Service

AECOM
1255 Broad Street
Clifton, NJ 07013-8591
(973) 883-8500 tel (973) 883-8501 fax
www.aecom.com

USPS - NORTHERN VIRGINIA VMF
2935 PROSPERITY AVE
FAIRFAX, VIRGINIA, 22031

UNITED STATES POSTAL SERVICE

E3.00 ELECTRICAL ONE LINE DIAGRAM & DETAILS

Scale: AS NOTED
Project:
Date: 09/02/2026
Revisions:
USPS File Number: K33601
Document Release: